INSTALL FIRE SUPPRESSION BUILDING 90029

HURLBURT FIELD, FL.

PROJECT NO. CP1026753

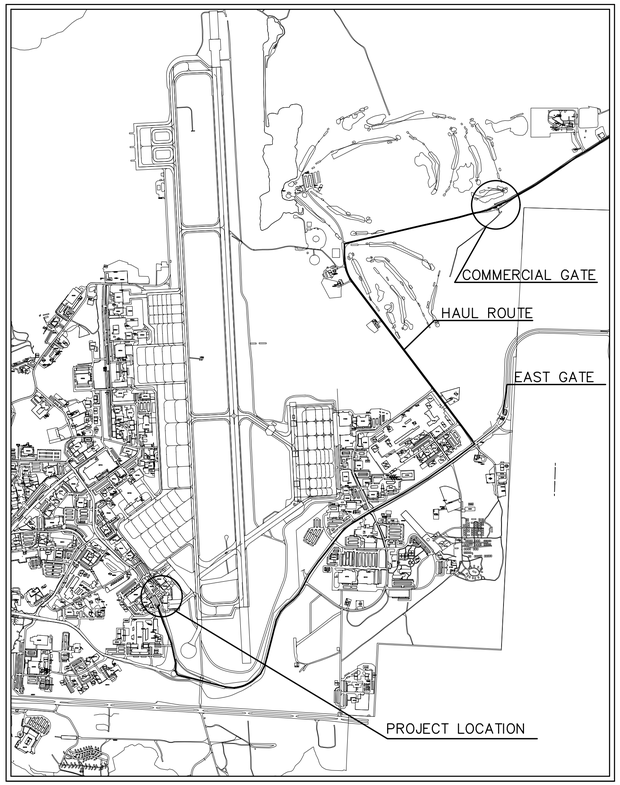

VICINITY MAP

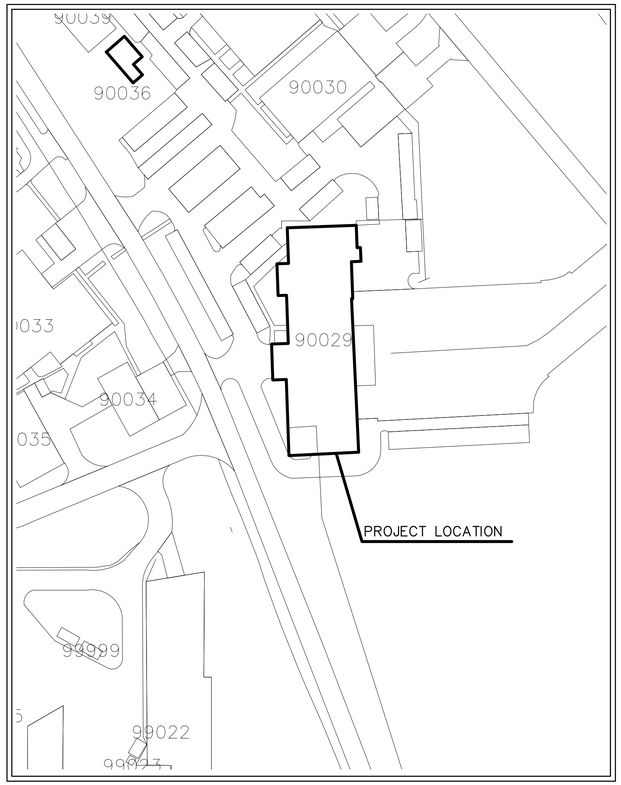

LOCATION MAP

SHEET REFERENCE	SHEET NUMBER	DESCRIPTION
G-001	1	TITLE, LOCATION MAP, AND INDEX OF DRAWINGS
F-001	2	LEGEND AND PROJECT GENERAL NOTES
F-002	3	SITE PLAN EXISTING CONDITIONS
FD101	4	LOWER LEVEL FIRE PROTECTION PLAN – DEMOLITION
FD102	5	UPPER LEVEL FIRE PROTECTION PLAN – DEMOLITION/EXISTING CONDITIONS
FD103	6	BLDG 90036 FIRE PUMP HOUSE – DEMOLITION
FD301	7	FIRE RISER/EQUIPMENT ROOM SECTIONS – DEMOLITION
FD401	8	ENLARGED FIRE RISER/EQUIPMENT ROOM PLAN – DEMOLITION
FD701	9	EXISTING FOAM SYSTEM SCHEMATIC – DEMOLITION
F-101	10	LOWER LEVEL FIRE PROTECTION PLAN – NEW WORK
F-102	11	UPPER LEVEL FIRE PROTECTION PLAN – NEW WORK/EXISTING CONDITIONS
F-103	12	BLDG 90036 FIRE PUMP HOUSE – NEW WORK
F-301	13	BUILDING FIRE PROTECTION SECTION – NEW WORK
F-401	14	ENLARGED FIRE RISER/EQUIPMENT ROOM PLAN – NEW WORK
F-402	15	ENLARGED MECHANICAL MEZZANINE PLAN – DEMOLITION AND NEW WORK
F-501	16	FIRE PROTECTION DETAILS
F-601	17	FIRE PROTECTION/FOAM RISER LINE DIAGRAM
F-602	18	FIRE PROTECTION SCHEDULES
F-603	19	FIRE SUPPRESSION CONTROLS-1
F-604	20	FIRE SUPPRESSION CONTROLS-2
F-701	21	FIRE PROTECTION PLAN – OPTICAL DETECTION
FA-101	22	FIRE ALARM LEGENDS
FA-102	23	FIRE ALARM MATRIX
FA-201	24	FIRE ALARM PLANS – BUILDING 90036
FA-202	25	FIRE ALARM PLANS – BUILDING 90029 – FIRST FLOOR
FA-203	26	FIRE ALARM PLANS – BUILDING 90029 – SECOND FLOOR
E-101	27	ELECTRICAL LEGENDS
E-201	28	ELECTRICAL SITE PLAN
E-202	29	ELECTRICAL PLANS – BUILDING 90036
E-203	30	ELECTRICAL PLANS – HANGAR 90029 – FIRST FLOOR
E-401	31	LARGE SCALE POWER PLANS
E-601	32	SINGLE LINE DIAGRAMS
S-001	33	GENERAL NOTES
S-100	34	FOAM GENERATOR LOCATION PLAN & DETAILS
S-200	35	JOIST LOADING

INDEX OF DRAWINGS

PETERSON ENGINEERING INC.
(PROF. ENG. #: 3600)
75 SOUTH "F" STREET
PENSACOLA, FLORIDA 32502
(850) 434-0513
PEI JOB #2018042

FREDERICK CHARLES BRADLEY LICENSE No.38898 STATE OF FLORIDA PROFESSIONAL ENGINEER
7/20/20

REV #	DATE	DESCRIPTION

INSTALL FIRE SUPPRESSION, BUILDING 90029

TITLE, LOCATION MAP, AND INDEX OF DRAWINGS

AIR FORCE SPECIAL OPERATIONS COMMAND
1 SPECIAL OPERATIONS CIVIL ENGINEER SQUADRON
HURLBURT FIELD, FLORIDA

DATE: 22 JULY 2020
DESIGNED BY: F.C. BRADLEY
DRAWN BY: E. KIMMIG
BUILDING NUMBER: 90029
PROJECT NUMBER: CP1026753
SHEET REFERENCE: G-001
SHEET NUMBER: 1 OF 35

D:\PROJECT\2018\18042 Repair Fire Suppression Hangar 90029\DWG\Fire\18042G-001.dwg, 9/29/2020 10:32:55 AM

FIRE PROTECTION LEGEND

- PIPING TO BE DEMOLISHED
- UPRIGHT QR SPRINKLER
- PENDANT QR SPRINKLER
- PIPING ELLED DOWN WITH OS&Y VALVE IN PLAN
- OS&Y VALVE IN PLAN
- FLEXIBLE PIPE CONNECTION
- W — BASE DISTRIBUTION WATER PIPING
- FM — FEED MAIN PIPING
- FOAM — FOAM PIPING
- TEST — TEST HEADER PIPING
- CONC — CONCENTRATE PIPING(S.S. PIPING)
- FW — FIRE WATER PIPING
- F — FIRE SPRINKLER PIPING
- D — DRAIN PIPING
- R — RELIEF PIPING
- D/R — DRAIN/RELIEF PIPING
- S — SURGE ARRESTER PIPING
- FSTRT — FOAM START STATION
- FSTOP — FOAM STOP STATION (DEAD-MAN TYPE)
- F — BUILDING FIRE PULL STATION
- POINT OF CONNECTION
- LIMIT OF DEMOLITION
- OD — OPTICAL FLAME DETECTOR
- FS — FLOW SWITCH
- T — TAMPER SWITCHES
- NO — NORMALLY OPEN
- NC — NORMALLY CLOSED
- B — BLUE BEACON
- DASHED ITEMS INCLUDING CONDUIT AND WIRING TO BE INSTALLED BY DIV. 26
- FOAM GENERATOR
- POST INDICATOR VALVE
- F.H. — FIRE HYDRANT
- OVERHEAD HEAT DETECTORS TO BE DEMOLISHED
- OPEN SIDEWALL SPRINKLERS
- 175°F Q.R. CLOSED SIDEWALL SPRINKLERS
- EXISTING HANGAR OVERHEAD 175°F Q.R. UPRIGHT SPRINKLER

FIRE PROTECTION ABBREVIATIONS

AFW	AFFF FIRE WATER
AFF	ABOVE FINISHED FLOOR
AFFF	AQUEOUS FILM FORMING FOAM
AHJ	AUTHORITY HAVING JURISDICTION
BFZ	BETWEEN FLANGED INDUCTOR
B/G	BELOW GROUND
B/W	BLADDER PRESSURIZATION PIPING
BLK	BLACK
BLDG	BUILDING
BM	BEAM
CCV	CONCENTRATE CONTROL VALVE
CONC.	CONCENTRATE
CP	CONTROL PANEL
DIA	DIAMETER
(E)	EXISTING
ETC	ETCETERA
EXP.	EXPANSION
EXST.	EXISTING
FCR	FOAM CONCENTRATE RETURN
FCS	FOAM CONCENTRATE SUPPLY
FL	FLANGE
FACU	FIRE ALARM CONTROL UNIT
RSFACU	RELEASING SERVICE FIRE ALARM CONTROL UNIT
FDC	FIRE DEPARTMENT CONNECTION
FW	FOAM WATER PIPING
FT	FEET
FD	FLOOR DRAIN
GPM	GALLONS PER MINUTE
HSC	HORIZONTAL SPLIT CASE
HP	HORSEPOWER
IN	INCHES
IL	IN LINE
HEF	HIGH EXPANSION FOAM GENERATOR
HPF	HIGH PRESSURE FOAM
IAW	IN ACCORDANCE WITH
IRH	INFRARED HEATER
LH	LIGHT HAZARD
MIL	MILITARY
MIN	MINIMUM
MAX	MAXIMUM
MFR	MANUFACTURER
(N)	NEW
NC	NORMALLY CLOSED
N/A	NOT APPLICABLE
OA	OUTSIDE AIR
OH	ORDINARY HAZARD
O/H	OVERHEAD
OS&Y	OUTSIDE SCREW AND YOKE
PIV	POST INDICATOR VALVE
PSI	POUNDS PER SQUARE INCH
PRESS	PRESSURE
PRV	PRESSURE REGULATING VALVE
PG	PRESSURE GAUGE
Q.R.	QUICK RESPONSE
SQ. FT.	SQUARE FOOT
S/R	SUPPLY AND RETURN
SS	STAINLESS STEEL
STL	STEEL
TB	THRUST BLOCK
TEFC	TOTALLY ENCLOSED, FAN COOLED
TS	TEMPERATURE SENSOR
TYP.	TYPICAL
VAC	VOLTS (ALTERNATING CURRENT)
V	VOLTS
W/	WITH

PROJECT GENERAL NOTES

A. THE CONTRACTOR SHALL REMOVE THE EXISTING AFFF LOW LEVEL FOAM NOZZLES AND INSTALL A HIGH EXPANSION FOAM SYSTEM IN HANGAR 90029.

B. CONTRACTOR SHALL PROVIDE COMPLETE FIRE SUPPRESSION SHOP DRAWING AND COMPLETE SPRINKLER CALCULATIONS, BOTH WET AND FOAM SYSTEMS.

C. CONTRACTOR SHALL PROVIDE HYDRAULIC SIZING CALCULATIONS PER THE UFC 4-211-01 AIRCRAFT MAINTENANCE HANGARS, WITH CHANGE 1, 11-01-2017.

D. THE EXISTING FIRE AND JOCKEY PUMPS IN BUILDING 90036 SHALL BE REPLACED.

E. ALL EXISTING AFFF PIPING AND COMPONENTS SHALL BE DEMOLISHED IN ACCORDANCE WITH AFCEC GUIDANCE FOR C-8 CHAIN AFFF REMEDIATION. THE CONTRACTOR SHALL ASSUME RESPONSIBILITY FOR THE COLLECTION, STORAGE, TRANSPORT AND DISPOSAL OF ALL WASTE AFFF AND RINSE MATERIAL GENERATED FROM THIS CONTRACT. CONTRACTOR SHALL MANAGE HAZARDOUS WASTE IN ACCORDANCE WITH THE RESOURCE CONSERVATION AND RECOVERY ACT (RCRA) AND ALL STATE, FEDERAL, LOCAL, DOT, AIR FORCE AND HURLBURT FIELD RULES AND REGULATIONS. THE CONTRACTOR SHALL TAKE ALL PRECAUTIONS TO ENSURE THAT WASTE AFFF AND RINSE MATERIAL IS PROPERLY COLLECTED FROM STORAGE TANK/S AND THE FIRE SUPPRESSION DISTRIBUTION SYSTEM IN A MANNER THAT ELIMINATES ANY SPILLAGE TO THE HANGAR FLOOR OR GROUND OUTSIDE – ALL ASPECTS OF SPILL REMEDIATION WILL BE CONTRACTORS RESPONSIBILITY. UPON RECOVERY OF THE AFFF, THE CONTRACTOR SHALL TRIPLE RINSE THE TANK AND DISTRIBUTION SYSTEM TO INCLUDE ALL PIPES AND COMPONENTS CONTAINING AFFF RESIDUALS. THE CONTRACTOR SHALL PREPARE ALL SHIPPING DOCUMENTS AND TRANSPORT THE WASTE AFFF AND RINSE MATERIAL TO AN EPA AND STATE APPROVED FACILITY FOR INCINERATION. A WASTE PROFILE AND MANIFEST PREPARED BY THE CONTRACTOR SHALL BE SUBMITIED TO THE 1 SOCES HAZARDOUS WASTE PROGRAM MANAGER AT LEAST 3 DAYS PRIOR TO TRANSPORTING THE WASTE OFF-SITE. THE CONTRACTOR SHALL ENSURE THAT A CERTIFICATE OF DESTRUCTION BY INCINERATION AND THE ORIGINAL MANIFEST SIGNED BY THE RECEIVING FACILITY IS FORWARDED TO THE 1 SOCES HAZARDOUS WASTE PROGRAM MANAGER WITHIN 30 DAYS FROM THE TIME THE WASTE LEAVES HURLBURT FIELD.

F. ALL PIPING ASSOCIATED WITH THE NEW HIGH EXPANSION FOAM SYSTEM SHALL BE NEW. ALL NEW PIPING SHALL BE PRIMED AND PAINTED IN ACCORDANCE WITH THE PROJECT SPECIFICATIONS.

G. PROJECT SHALL REQUIRE A FULL FLOW DOCUMENTED TEST OF THE OPERATION OF THE NEW LOW-LEVEL HIGH EXPANSION FOAM SYSTEM; SEE FOAM SPEC. SECTION..

H. THE CALCULATIONS MUST INCLUDE THE OPERATION OF THE LOW-LEVEL HIGH EXPANSION FOAM SYSTEM AND 5000 SQUARE FEET WET SYSTEM OPERATING SIMULTANEOUSLY.

I. THE CONTRACTOR IS RESPONSIBLE FOR ALL NEW EQUIPMENT INSTALLED AND TESTING TO MEET THE REQUIREMENTS OF UFC 4-211-01.

J. ALL WELDING ON THIS PROJECT MUST BE SCHEDULED WITH THE CONTRACTING OFFICER'S REPRESENTATIVE. NO WELDING SHALL TAKE PLACE IN THE HANGAR WHEN A PLANE IS PRESENT IN THE HANGAR.

K. THE CONTRACTOR SHALL PERFORM ALL FOAM TESTING IN ACCORDANCE WITH THE SPECIFICATIONS AND UFC 4-211-01 AIRCRAFT MAINTENANCE HANGARS, WITH CHANGE 1, 11-01-2017. THE CONTRACTOR SHALL COVER WITH PLASTIC ALL ITEMS THAT MAY BE DAMAGED BY FOAM. CONTRACTOR SHALL CREATE A CONTAINED AREA BY SEALING ANY DOORS, CRACKS, OPENINGS AND DRAINS WITH PLASTIC AND TAPE. CONTRACTOR SHALL TAKE MEASURES TO ENSURE FOAM DOES NOT GO INTO THE SANITARY SEWER SYSTEM. CONTRACTOR SHALL COORDINATE TEST WITH CONTRACTING OFFICER'S REPRESENTATIVES, BUILDING OCCUPANTS, ENGINEERING PROJECT MANAGER AND ENVIRONMENTAL DEPARTMENT IN WRITING A MINIMUM OF 14 CALENDAR DAYS IN ADVANCE. THE SCHEDULES AND MISSIONS OF THE HURLBURT FIELD PERSONNEL SHALL DETERMINE TEST DATE. CONTRACTOR SHALL REMOVE ALL PLASTIC AND TAPE AFTER TEST IS COMPLETE AND ALL FOAM HAS EVAPORATED. AFTER FOAM HAS EVAPORATED THE CONTRACTOR SHALL USE A FLOOR SCRUBBER TO CLEAN THE RESIDUE FROM THE FLOOR. THE CONTRACTOR SHALL COLLECT THIS FOAM RESIDUE ALONG WITH THE REST OF THE TESTING DEBRIS, CONTAINERIZE IT AND DISPOSE OF IT PROPERLY OFF BASE.

L. AFTER THE FOAM TEST IS COMPLETE THE CONTRACTOR SHALL PROVIDE INSTRUCTION TO GOVERNMENT MAINTENANCE PERSONNEL WHILE RE-FILLING TANK.

M. THE CONTRACTOR SHALL COORDINATE THE WORK SCHEDULE FOR THE HANGAR WITH THE CONTRACTING OFFICER AND THE HANGAR OCCUPANTS. THE GOVERNMENT MISSION SHALL TAKE PRECEDENCE OVER THE WORK SCHEDULE. CONTRACTOR SHALL NOT BEGIN ANY WORK UNTIL THE SCHEDULE IS APPROVED IN WRITING.

N. CONTRACTOR SHALL NOT BE ALLOWED TO WORK OVERHEAD IN HANGAR BAY WHEN HANGAR BAY IS OCCUPIED. ALL OVERHEAD WORK IN HANGAR BAY SHALL BE DONE DURING ALLOTTED UNOCCUPIED TIME. WHEN PERMITTED BY THE CONTRACTING OFFICER, THE CONTRACTOR SHALL BE ALLOWED TO WORK FROM THE GROUND ALONG THE WALLS OF THE HANGAR BAY DURING OCCUPIED PERIODS. CONTRACTOR SHALL HAVE FULL ACCESS TO COMPLETE WORK IN HANGAR BAY DURING ALLOTTED UNOCCUPIED TIME.

O. THE CONTRACTOR SHALL PROVIDE WRITTEN NOTICE TO THE CONTRACTING OFFICER AND THE HANGAR OCCUPANTS 30 DAYS AND 7 DAYS BEFORE THE WORK IN THE HANGAR BAY OR ANY OTHER WORK THAT WILL IMPACT THE MISSION IS STARTED.

P. CONTRACTOR SHALL HAVE ALL EQUIPMENT ON SITE AND INSPECTED BEFORE ANY DEMOLITION CAN BEGIN. ONCE WORK HAS STARTED THE CONTRACTOR SHALL WORK EVERY DAY UNTIL THE PROJECT IS COMPLETE. THE CONTRACTOR SHALL MAKE EVERY EFFORT TO MINIMIZE THE TIME THE HANGAR IS NOT OPERATIONAL.

FIRE PUMP INSTALLATION PHASING NOTES

1. ALL WORK IN BUILDING 90036 SHALL BE PHASED TO MINIMIZE FACILITY SPRINKLER SYSTEM DOWNTIME. CONTRACTOR SHALL COORDINATE WITH GOVERNMENT AND OBTAIN GOVERNMENT APPROVAL FOR PERIODS THAT BUILDING 90029 AND 90032 SHALL BE UNOCCUPIED. FIRE PUMPS SHALL REMAIN OPERATIONAL DURING OCCUPIED TIMES.

2. FIRE PUMP #1: SHUT OFF OS&Y VALVES ON EITHER SIDE OF PUMP #1. REMOVE EXISTING PUMP #1 AND ASSOCIATED PUMP CONTROLLER. INSTALL NEW ELECTRICAL SERVICE TO PUMP #1 (SEE ELECTRICAL DRAWINGS). MODIFY EQUIPMENT PAD AND INSTALL NEW PUMP #1 AND NEW PUMP CONTROLLER. DURING FIRE PUMP REPLACEMENT, FIRE PUMPS #2, #3, AND #4 SHALL REMAIN OPERATIONAL.

3. FIRE PUMP #3: AFTER FIRE PUMP #1 IS OPERATIONAL, SHUT OFF OS&Y VALVES ON EITHER SIDE OF PUMP #3. REMOVE EXISTING PUMP #3 AND ASSOCIATED PUMP CONTROLLER. REMOVE EXISTING EQUIPMENT PAD AND INSTALL NEW EQUIPMENT PAD. INSTALL NEW PUMP #3 AND NEW PUMP CONTROLLER. INSTALL NEW ELECTRICAL SERVICE TO PUMP #3 (SEE ELECTRICAL DRAWINGS). DURING FIRE PUMP REPLACEMENT, FIRE PUMPS #1, #2, AND #4 SHALL REMAIN OPERATIONAL.

4. FIRE PUMP #2: AFTER FIRE PUMP #3 IS OPERATIONAL, SHUT OFF OS&Y VALVES ON EITHER SIDE OF PUMP #2. REMOVE EXISTING PUMP #2 AND ASSOCIATED PUMP CONTROLLER. MODIFY EQUIPMENT PAD AND INSTALL NEW PUMP #2 AND NEW PUMP CONTROLLER. INSTALL NEW ELECTRICAL SERVICE TO PUMP #2 (SEE ELECTRICAL DRAWINGS). DURING FIRE PUMP REPLACEMENT, FIRE PUMPS #1, #3, AND #4 SHALL REMAIN OPERATIONAL.

5. FIRE PUMP #4: AFTER FIRE PUMP #2 IS OPERATIONAL, SHUT OFF OS&Y VALVES ON EITHER SIDE OF PUMP #4. REMOVE EXISTING PUMP #4 AND ASSOCIATED PUMP CONTROLLER. DURING FIRE PUMP REMOVAL, FIRE PUMPS #1, #2, AND #3 SHALL REMAIN OPERATIONAL. DEMOLITION FROM PUMP #4 INLET OS&Y TO FLANGE INDICATED SHALL BE DONE DURING GOVERNMENT APPROVED UNOCCUPIED PERIOD. SHUTOFF TANK VALVES AND PIV OUTSIDE BLDG 90036. DEMOLISH PIPING AS INDICATED. REMOVE ALL DEBRIS FROM UNDERGROUND PIPE BEFORE INSTALLING BLIND FLANGE. AFTER DEMOLITION IS COMPLETE, REOPEN TANK VALVES AND PIV.

6. SURGE TANK: WORK SHALL BE DONE DURING PERIOD WHEN HANGAR 90029 AND 90032 ARE UNOCCUPIED. THIS PERIOD SHALL BE APPROVED BY THE GOVERNMENT. AFTER NEW FIRE PUMPS ARE INSTALLED, SHUT OFF SUPPLY TO EACH EACH FIRE PUMP AND SHUT OFF PIV OUTSIDE BUILDING 90036. INSTALL NEW SURGE TANK AS INDICATED. AFTER SURGE TANK IS INSTALLED REOPEN VALVES TO FIRE PUMPS AND REOPEN PIV.

7. RECIRCULATION LOOP DEMOLITION: WORK SHALL BE DONE DURING PERIOD WHEN HANGAR 90029 AND 90032 ARE UNOCCUPIED. THIS PERIOD SHALL BE APPROVED BY THE GOVERNMENT. SHUTOFF PIV OUTSIDE OF BUILDING 90036 AND SHUTOFF TANK SUPPLY LINES TO BUILDING 90036. DEMOLISH RECIRCULATION LOOP AS INDICATED. REMOVE ALL DEBRIS FROM UNDERGROUND PIPE BEFORE INSTALLING BLIND FLANGE. AFTER DEMOLITION IS COMPLETE, REOPEN TANK VALVES AND PIV.

PETERSON ENGINEERING INC.
(PROF. ENG. #: 3600)
75 SOUTH "F" STREET
PENSACOLA, FLORIDA 32502
(850) 434-0513
PEI JOB #2018042

FREDERICK CHARLES BRADLEY LICENSE No.36898 STATE OF FLORIDA PROFESSIONAL ENGINEER
7/20/20

REV #	DATE	DESCRIPTION

INSTALL FIRE SUPPRESSION, BUILDING 90029

LEGEND AND PROJECT GENERAL NOTES

AIR FORCE SPECIAL OPERATIONS COMMAND
1 SPECIAL OPERATIONS CIVIL ENGINEER SQUADRON
HURLBURT FIELD, FLORIDA

DATE: 22 JULY 2020
DESIGNED BY: F.C. BRADLEY
DRAWN BY: E. KIMMIG
BUILDING NUMBER: 90029
PROJECT NUMBER: CP1026753
SHEET REFERENCE: F-001
SHEET NUMBER: 2 OF 35

D:\PROJECT\2018\18042 Repair Fire Suppression Hangar 90029\DWG\Fire\18042F-001.dwg, 9/29/2020 10:33:11 AM

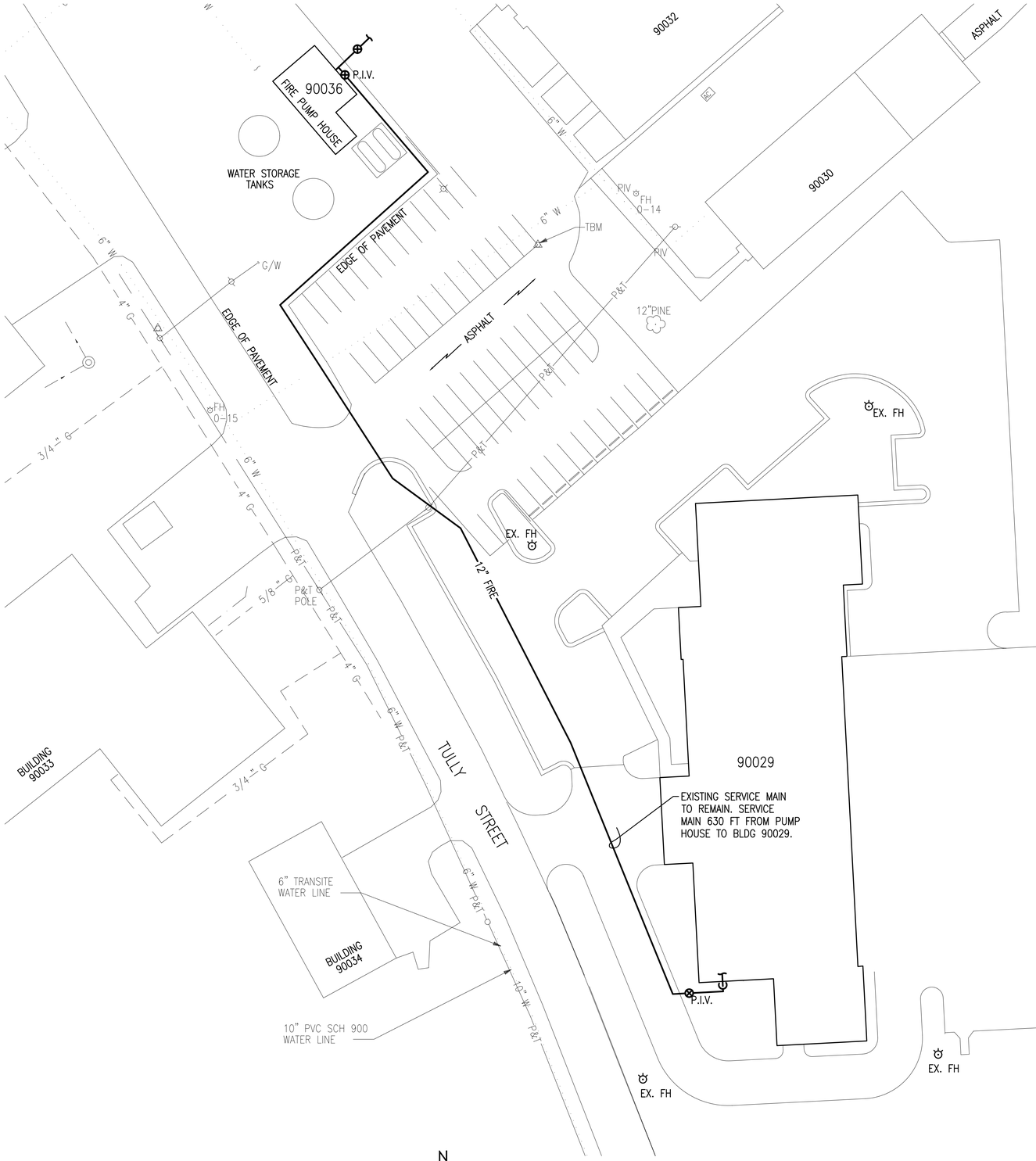

BUILDING 90029 SITE PLAN
SCALE: 1" = 30'-0"

REV #	DATE	DESCRIPTION

INSTALL FIRE SUPPRESSION, BUILDING 90029

SITE PLAN EXISTING CONDITIONS

AIR FORCE SPECIAL OPERATIONS COMMAND
1 SPECIAL OPERATIONS CIVIL ENGINEER SQUADRON
HURLBURT FIELD, FLORIDA

DATE:	22 JULY 2020
DESIGNED BY:	F.C. BRADLEY
DRAWN BY:	E. KIMMIG
BUILDING NUMBER:	90029
PROJECT NUMBER:	CP1026753
SHEET REFERENCE:	F-002
SHEET NUMBER:	3 OF 35

FREDERICK CHARLES BRADLEY
LICENSE
No.38898
PROFESSIONAL ENGINEER
STATE OF FLORIDA
7/20/20

PETERSON ENGINEERING INC.
(PROF. ENG. #: 3600)
75 SOUTH "F" STREET
PENSACOLA, FLORIDA 32502
(850) 434-0513
PEI JOB #2018042

D:\PROJECT\2018\18042 Repair Fire Suppression Hangar 90029\DWG\Fire\18042F-002.dwg, 9/29/2020 10:33:13 AM

SHEET NOTES

1. REMOVE EXISTING AFFF FLOOR MOUNTED NOZZLES, VALVES, BOLLARDS, PIPING, CONTROLS AND ALL PARTS OF THIS SYSTEM. REMOVE PIPING BACK TO AND INCLUDING THE RISER IN ROOM 116.
2. REMOVE EXISTING FOAM ACTIVATION SWITCHES. TURN SWITCHES OVER TO THE GOVERNMENT.
3. REMOVE EXISTING BOLLARDS. CUT BOLLARDS OFF JUST BELOW FLOOR LEVEL, GRIND SMOOTH. LEVEL FLOOR WITH GROUT AND FINISH AND PAINT TO MATCH EXISTING.
4. REMOVE ALL THE EXISTING FOAM SYSTEM DEVICES (HEAT DETECTORS, PULL STATIONS, ETC), CONDUIT AND WIRING.
5. CUT ANCHOR BOLT AND GRIND SMOOTH.
6. REMOVE CONCRETE PAD. PATCH AND PAINT FLOOR TO MATCH EXISTING. USE GROUT TO MAKE SMOOTH.
7. EXISTING CLAMSHELL FOAM–WATER RELEASE SWITCH AND ALL ASSOCIATED CONDUIT AND WIRING TO BE REMOVED.
8. SEE SHEET FD401 FOR DEMOLITION IN THE RISER ROOM.
9. EXISTING HYDRAULIC ELEVATOR AND EQUIPMENT ROOM. UPGRADE FIRE SPRINKLER PROTECTION PER UFC 3–600–01. SEE SHEET F–101.
10. EXISTING SPRINKLER SYSTEM SERVING SHOP/OFFICES SHALL REMAIN AND BE REUSED. SPRINKLERS SHALL BE REPLACED. SEE NEW WORK DRAWINGS.

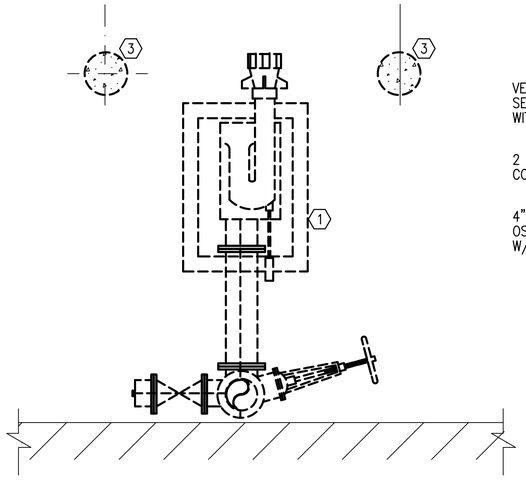

OSCILLATING MONITOR – PLAN
NO SCALE

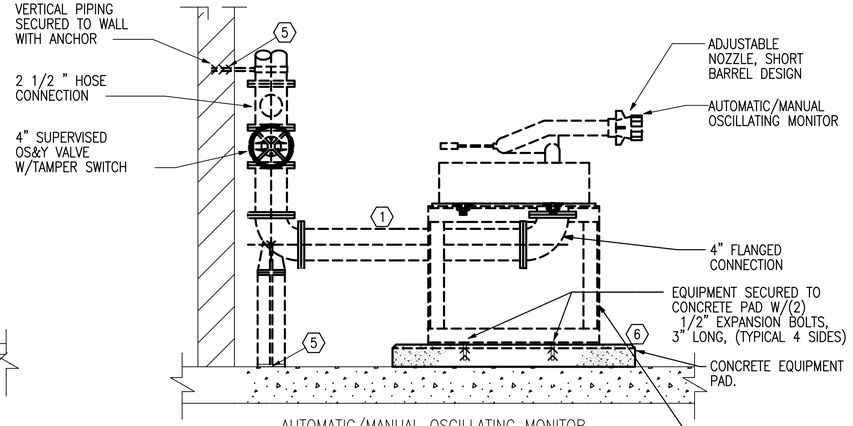

AUTOMATIC/MANUAL OSCILLATING MONITOR
NO SCALE

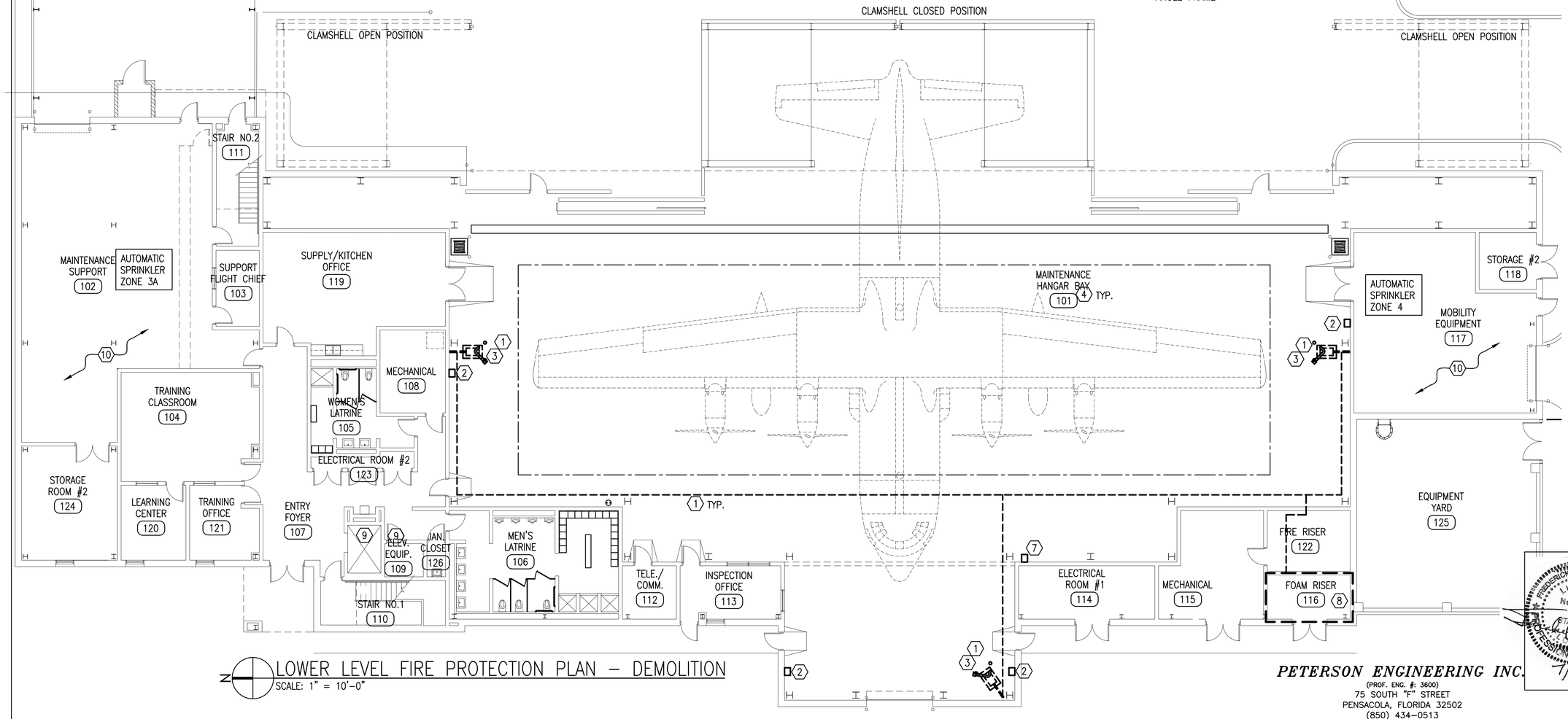

N

LOWER LEVEL FIRE PROTECTION PLAN – DEMOLITION
SCALE: 1" = 10'–0"

PETERSON ENGINEERING INC.
(PROF. ENG. #: 3600)
75 SOUTH "F" STREET
PENSACOLA, FLORIDA 32502
(850) 434–0513
PEI JOB #2018042

FREDERICK CHARLES BRADLEY LICENSE No.36898 STATE OF FLORIDA PROFESSIONAL ENGINEER
7/28/20

REV #	DATE	DESCRIPTION

INSTALL FIRE SUPPRESSION, BUILDING 90029

LOWER LEVEL FIRE PROTECTION PLAN – DEMOLITION

AIR FORCE SPECIAL OPERATIONS COMMAND
1 SPECIAL OPERATIONS CIVIL ENGINEER SQUADRON
HURLBURT FIELD, FLORIDA

DATE:	22 JULY 2020
DESIGNED BY:	F.C. BRADLEY
DRAWN BY:	E. KIMMIG
BUILDING NUMBER:	90029
PROJECT NUMBER:	CP1026753
SHEET REFERENCE:	FD101
SHEET NUMBER:	4 OF 35

D:\PROJECT\2018\18042 Repair Fire Suppression Hangar 90029\DWG\Fire\18042FD101.dwg, 9/29/2020 10:32:57 AM

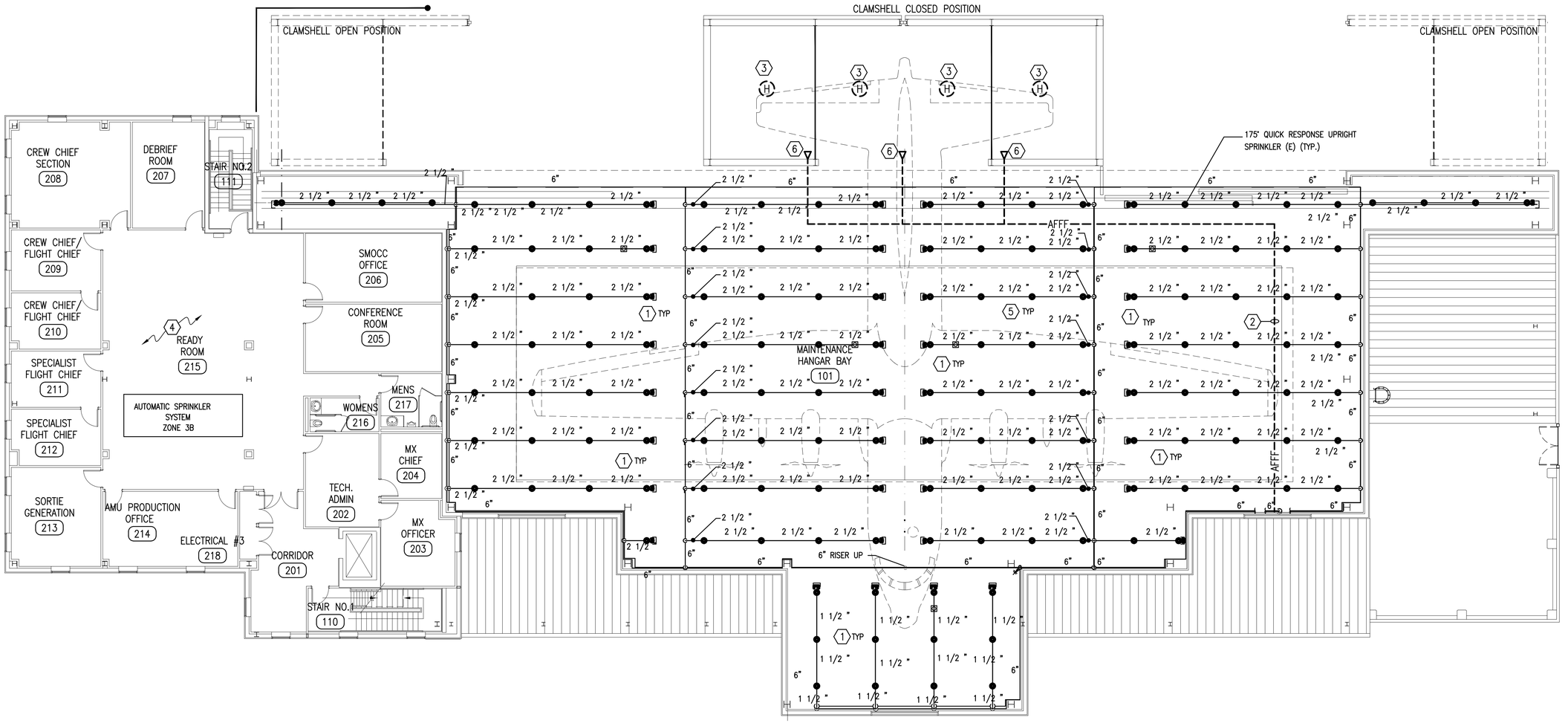

N

UPPER LEVEL FIRE PROTECTION PLAN – DEMOLITION/EXISTING CONDITIONS

SCALE: 1" = 10'-0"

SHEET NOTES

1. EXISTING HANGAR OVERHEAD SPRINKLER (UPRIGHT 175°F Q.R. TYPE) AND PIPING TO REMAIN AND BE REUSED, COMPLETE THROUGHOUT HANGAR BAY AND HANGAR DOOR POCKETS. PIPING SHALL BE CLEANED AND RINSED.
2. THE EXISTING CLAMSHELL DELUGE SPRINKLER PIPING SHALL BE DEMOLISHED.
3. OVERHEAD HEAT DETECTORS SHALL BE DEMOLISHED.
4. EXISTING WET PIPE SYSTEM SERVING THE SHOP/OFFICE AREAS TO REMAIN. EXISTING SPRINKLERS IN THIS AREA SHALL BE REPLACED. SEE NEW WORK DRAWINGS.
5. REMOVE ALL THE EXISTING FOAM SYSTEM DEVICES (HEAT DETECTORS, PULL STATIONS ETC.) CONDUIT AND WIRING EXCEPT INDICATED DEVICES.
6. REMOVE EXISTING OPEN DELUGE SPRINKLER NOZZLES.

PETERSON ENGINEERING INC.
(PROF. ENG. #: 3600)
75 SOUTH "F" STREET
PENSACOLA, FLORIDA 32502
(850) 434-0513
PEI JOB #2018042

FREDERICK CHARLES BRADLEY LICENSE No.38898 STATE OF FLORIDA PROFESSIONAL ENGINEER
7/20/20

REV #	DATE	DESCRIPTION

INSTALL FIRE SUPPRESSION, BUILDING 90029

UPPER LEVEL FIRE PROTECTION PLAN–DEMOLITION/EXISTING CONDITIONS

AIR FORCE SPECIAL OPERATIONS COMMAND
1 SPECIAL OPERATIONS CIVIL ENGINEER SQUADRON
HURLBURT FIELD, FLORIDA

DATE:	22 JULY 2020
DESIGNED BY:	F.C. BRADLEY
DRAWN BY:	E. KIMMIG
BUILDING NUMBER:	90029
PROJECT NUMBER:	CP1026753
SHEET REFERENCE:	FD102
SHEET NUMBER:	5 OF 35

D:\PROJECT\2018\18042 Repair Fire Suppression Hangar 90029\DWG\Fire\18042FD102.dwg, 9/29/2020 10:33:00 AM

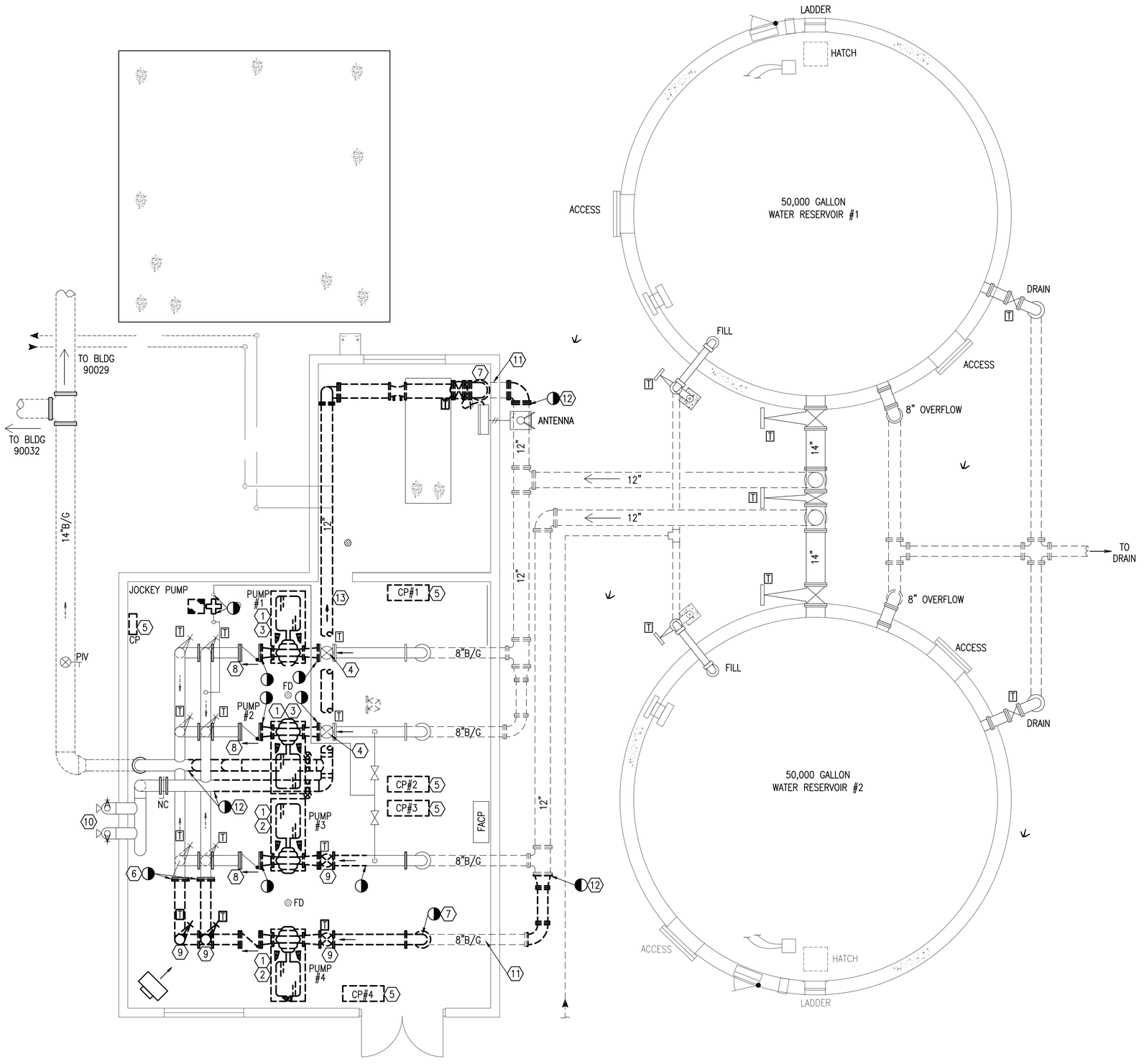

BLDG 90036 FIRE PROTECTION PLAN – DEMOLITION
SCALE: 3/16" = 1'-0"

SHEET NOTES

GENERAL NOTE: FIRE PUMP DEMOLITION AND NEW WORK SHALL BE PHASED TO MINIMIZE SPRINKLER SYSTEM DOWNTIME. SEE SHEET F-001 FOR FIRE PUMP INSTALLATION PHASING NOTES.

1. DEMOLISH EXISTING FIRE PUMP.
2. DEMOLISH EXISTING FIRE PUMP PAD.
3. EXISTING FIRE PUMP PAD TO REMAIN AND BE REUSED.
4. EXISTING OS&Y VALVE TO REMAIN AND BE REUSED.
5. DEMOLISH EXISTING FIRE PUMP CONTROLLER. SEE ELECTRICAL DRAWINGS.
6. DEMOLISH PIPING TO FLANGE.
7. DEMOLISH PIPING BELOW FLOOR AND CAP. FILL HOLE WITH GROUT AND SMOOTH TO MATCH EXISTING FLOOR.
8. EXISTING CHECK VALVE TO REMAIN AND BE REUSED.
9. DEMOLISH OS&Y VALVE.
10. EXISTING TEST HEADER TO REMAIN AND BE REUSED.
11. ABANDONED PIPING UNDER BUILDING IN PLACE.
12. DEMOLISH PIPING TO POINT INDICATED AND INSTALL NEW BLIND FLANGE.
13. RECIRCULATION LOOP SHALL BE DEMOLISHED.

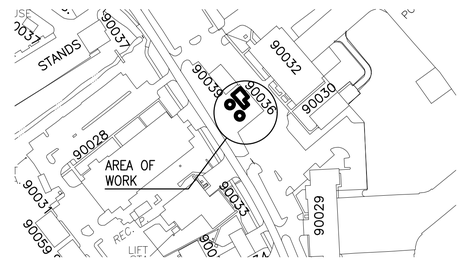

SITE PLAN
NO SCALE

PETERSON ENGINEERING INC.
(PROF. ENG. #: 3600)
75 SOUTH "F" STREET
PENSACOLA, FLORIDA 32502
(850) 434-0513
PEI JOB #2018042

FREDERICK CHARLES BRADLEY
LICENSE
No.38898
STATE OF FLORIDA
PROFESSIONAL ENGINEER
7/22/20

REV #	DATE	DESCRIPTION

INSTALL FIRE SUPPRESSION, BUILDING 90029

BLDG 90036 FIRE PUMP HOUSE-DEMOLITION

AIR FORCE SPECIAL OPERATIONS COMMAND
1 SPECIAL OPERATIONS CIVIL ENGINEER SQUADRON
HURLBURT FIELD, FLORIDA

DATE: 22 JULY 2020
DESIGNED BY: F.C. BRADLEY
DRAWN BY: E. KIMMIG
BUILDING NUMBER: 90029
PROJECT NUMBER: CP1026753
SHEET REFERENCE: FD103
SHEET NUMBER: 6 OF 35

D:\PROJECT\2018\18042 Repair Fire Suppression Hangar 90029\DWG\Fire\18042FD103.dwg, 9/29/2020 10:33:02 AM

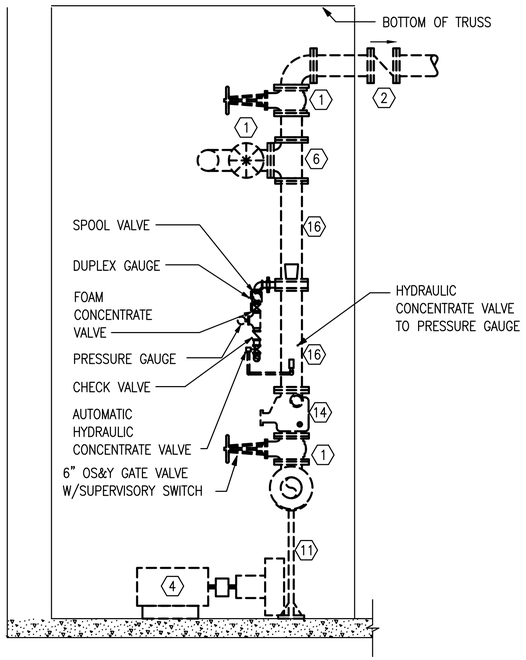

DEMOLITION SECTION A
SCALE: 1/2" = 1'-0"
FD301 | FD401

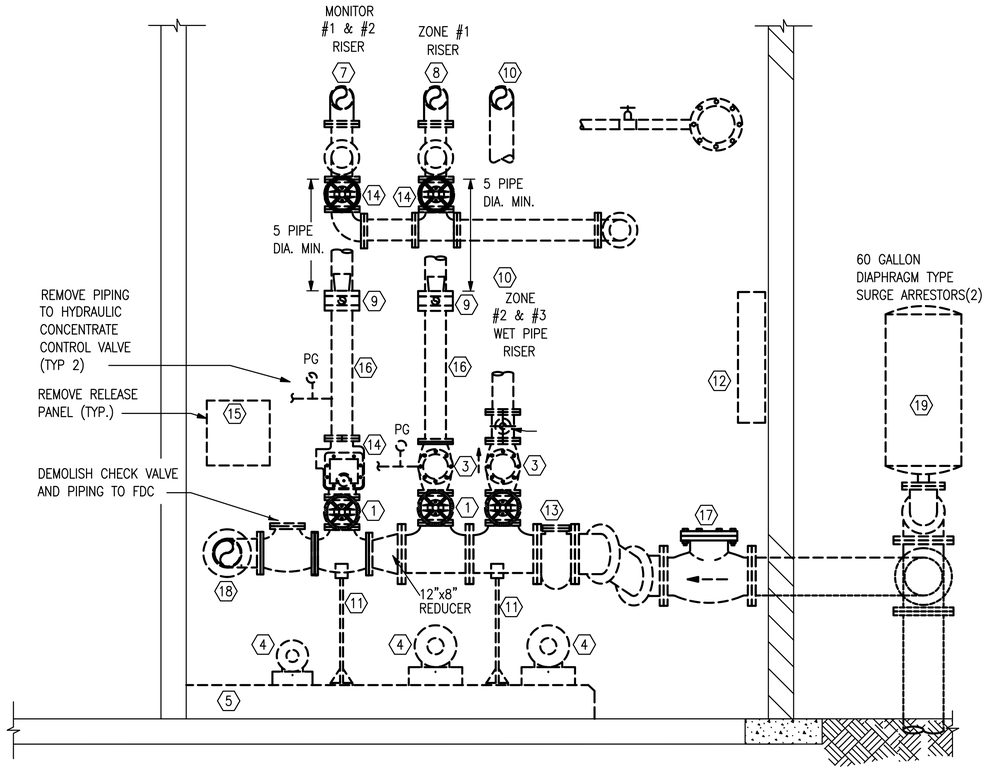

DEMOLITION SECTION B
SCALE: 1/2" = 1'-0"
FD301 | FD401

SHEET NOTES

1. REMOVE OS&Y GATE VALVE W/VALVE TAMPER SWITCH
2. REMOVE 6" CHECK VALVE
3. REMOVE 6" ALARM VALVE W/STANDARD TRIM
4. REMOVE FOAM CONCENTRATE PUMP
5. REMOVE CONCRETE EQUIPMENT PAD
6. REMOVE 6" FOAM RISER TEST CONNECTION
7. REMOVE MONITOR RISER.
8. REMOVE WET AFFF SYSTEM RISER.
9. REMOVE 6" IN-LINE BALANCE PROPORTIONER ASSEMBLY.
10. REMOVE WET PIPE SPRINKLER RISER W/ALARM VALVE
11. REMOVE SADDLE SUPPORT
12. REMOVE FOAM PUMP CONTROLLER, TYPICAL 3.
13. REMOVE 12" BUCKET TYPE STRAINER
14. REMOVE AUTOMATIC WATER CONTROL VALVE
15. REMOVE AFFF SYSTEM CONTROL PANEL.
16. REMOVE 30" LONG SPOOL PIECE
17. REMOVE 12" CHECK VALVE
18. REMOVE 8"x6" REDUCING ELBOW AND PIPING TO FDC.
19. REMOVE SURGE ARRESTOR TANKS, TYP. 2

PETERSON ENGINEERING INC.
(PROF. ENG. #: 3600)
75 SOUTH "F" STREET
PENSACOLA, FLORIDA 32502
(850) 434-0513
PEI JOB #2018042

FREDERICK CHARLES BRADLEY LICENSE No.38898 STATE OF FLORIDA PROFESSIONAL ENGINEER
7/22/20

REV #	DATE	DESCRIPTION

INSTALL FIRE SUPPRESSION, BUILDING 90029

FIRE RISER/EQUIPMENT ROOM SECTIONS-DEMOLITION

AIR FORCE SPECIAL OPERATIONS COMMAND
1 SPECIAL OPERATIONS CIVIL ENGINEER SQUADRON
HURLBURT FIELD, FLORIDA

DATE: 22 JULY 2020
DESIGNED BY: F.C. BRADLEY
DRAWN BY: E. KIMMIG
BUILDING NUMBER: 90029
PROJECT NUMBER: CP1026753
SHEET REFERENCE: **FD301**
SHEET NUMBER: 7 OF 35

D:\PROJECT\2018\18042 Repair Fire Suppression Hangar 90029\DWG\Fire\18042FD301.dwg, 9/29/2020 10:33:05 AM

SHEET NOTES

1. COMPLETELY REMOVE 6" OS&Y GATE VALVE W/VALVE TAMPER SWITCH, ALARM VALVE, PIPING AND ENTIRE MONITOR RISER.
2. REMOVE 6" CHECK VALVE
3. REMOVE TEST HEADER PIPING AS INDICATED.
4. REMOVE FOAM CONCENTRATE PUMP
5. REMOVE CONCRETE EQUIPMENT PAD
6. REMOVE 6" FOAM RISER TEST CONNECTION
7. COMPLETELY REMOVE ALL MONITOR PIPING.
8. WET AFFF SYSTEM RISER SHALL BE COMPLETELY REMOVED.
9. REMOVE IN-LINE BALANCE PROPORTIONER ASSEMBLY.
10. REMOVE WET PIPE SPRINKLER RISER W/ALARM VALVE
11. REMOVE SADDLE SUPPORT
12. REMOVE FLOW SWITCH.
13. REMOVE 12" BASKET TYPE STRAINER
14. REMOVE ISOLATION VALVE
15. TEST HEADER TO BE RELOCATED AND REUSED. SEE NEW WORK DRAWINGS.
16. REMOVE FDC AND PIPING, PATCH WALL TO MATCH EXISTING.
17. REMOVE 12" CHECK VALVE
18. REMOVE 8"x6" REDUCING ELBOW
19. REMOVE 2" DRAIN TO 2" DRAIN HEADER PIPED TO OUTSIDE DRAIN OUTLET
20. REMOVE FOAM STORAGE TANK
21. REMOVE 1-1/2" TANK DRAIN/FILL
22. REMOVE AFFF CONCENTRATE RETURN PIPE
23. REMOVE AFFF CONCENTRATE SUPPLY PIPE
24. REMOVE AFFF CONCENTRATE SUPPLY PIPE TO PROPORTIONERS
25. REMOVE FOAM PUMP CONTROLLER.
26. REMOVE MODULE CABINET.
27. REMOVE B/G PIPING TO POINT INDICATED. CONTRACTOR SHALL OBTAIN DIG PERMIT BEFORE BEGINNING WORK.
28. REMOVE CLAMSHELL DELUGE VALVE AND ASSOCIATED CONTROLS PIPING
29. REMOVE SURGE ARRESTOR TANKS
30. REMOVE WALL PIPE PENETRATION, PATCH WALL TO MATCH EXISTING.
31. EXISTING WET PIPE SPRINKLER PIPING PROTECTING ZONE 4 AREAS INCLUDING THE RISER ROOM TO REMAIN.
32. EXISTING GAS LINE TO BE REMOVED AND REROUTED.

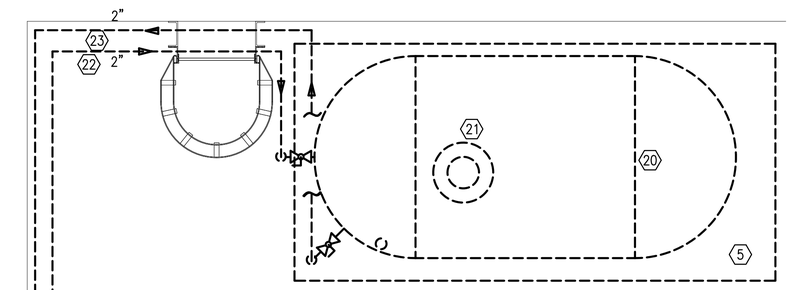

NOTE: CONCENTRATE TANK AND LINES UPSTREAM OF THE PROPORTIONER HAVE ALREADY BEEN TRIPLE RINSED UNDER SEPARATE PROJECT.

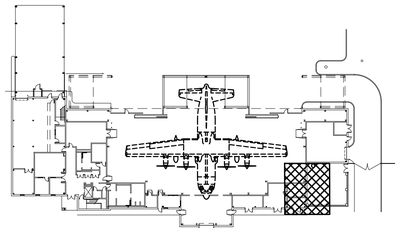

KEY PLAN
NOT TO SCALE

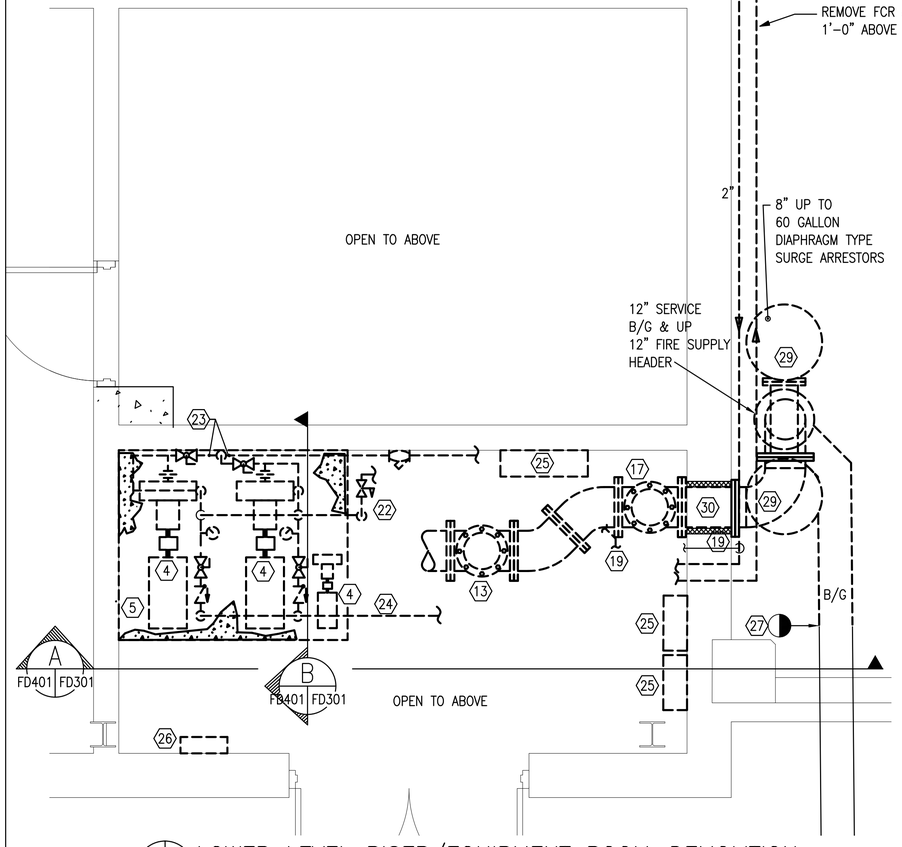

LOWER LEVEL RISER/EQUIPMENT ROOM-DEMOLITION
SCALE: 1/2" = 1'-0"

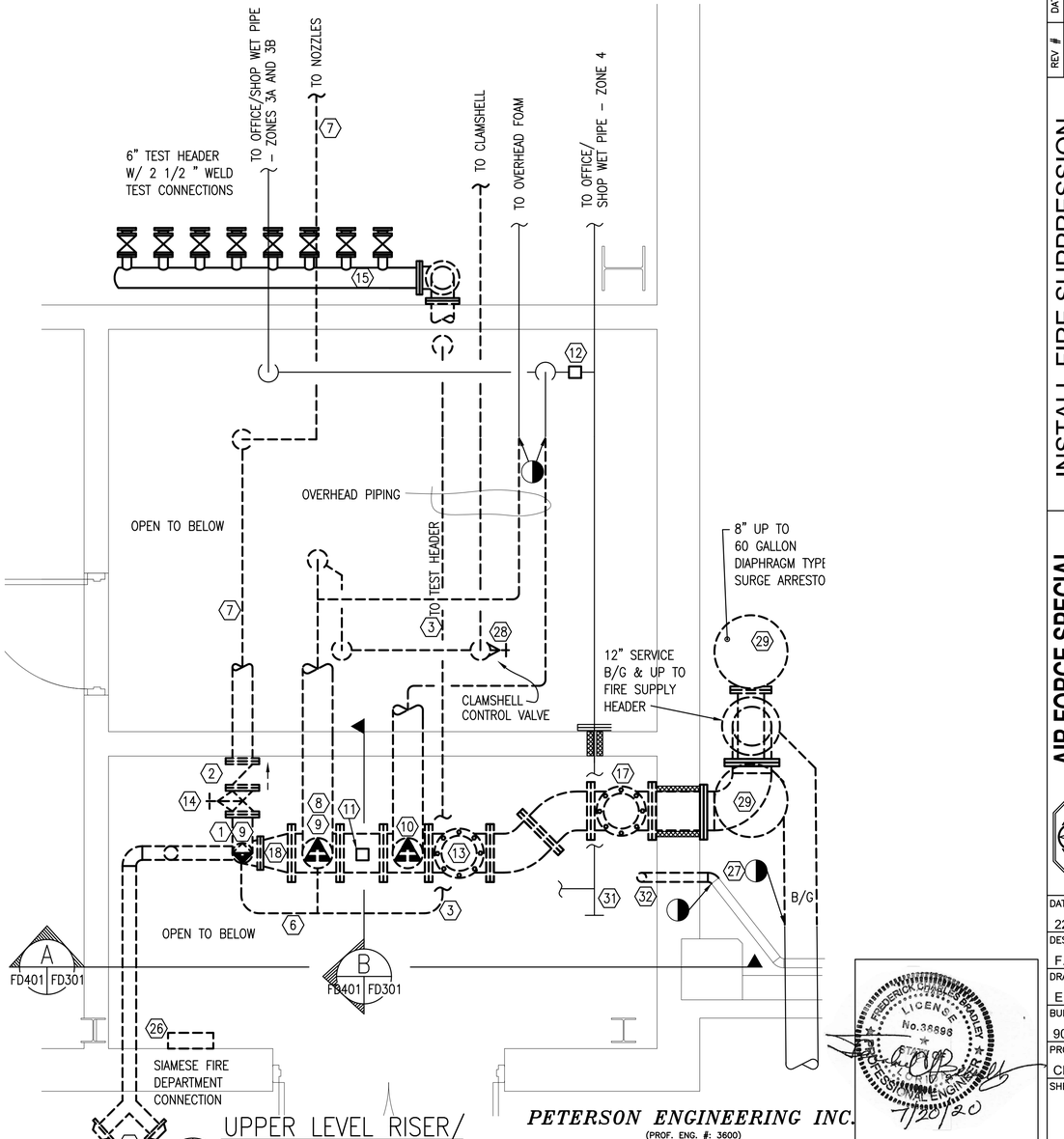

UPPER LEVEL RISER/ EQUIPMENT ROOM-DEMOLITION
SCALE: 1/2" = 1'-0"

PETERSON ENGINEERING INC.
(PROF. ENG. #: 3600)
75 SOUTH "F" STREET
PENSACOLA, FLORIDA 32502
(850) 434-0513
PEI JOB #2018042

FREDERICK CHARLES BRADLEY LICENSE No.38898 STATE OF FLORIDA PROFESSIONAL ENGINEER
7/20/20

REV #	DATE	DESCRIPTION

INSTALL FIRE SUPPRESSION, BUILDING 90029

ENLARGED FIRE RISER/EQUIPMENT ROOM PLAN-DEMOLITION

AIR FORCE SPECIAL OPERATIONS COMMAND
1 SPECIAL OPERATIONS CIVIL ENGINEER SQUADRON
HURLBURT FIELD, FLORIDA

DATE:	22 JULY 2020
DESIGNED BY:	F.C. BRADLEY
DRAWN BY:	E. KIMMIG
BUILDING NUMBER:	90029
PROJECT NUMBER:	CP1026753
SHEET REFERENCE:	FD401
SHEET NUMBER:	8 OF 35

D:\PROJECT\2018\18042 Repair Fire Suppression Hangar 90029\DWG\Fire\18042FD401.dwg, 9/29/2020 10:33:07 AM

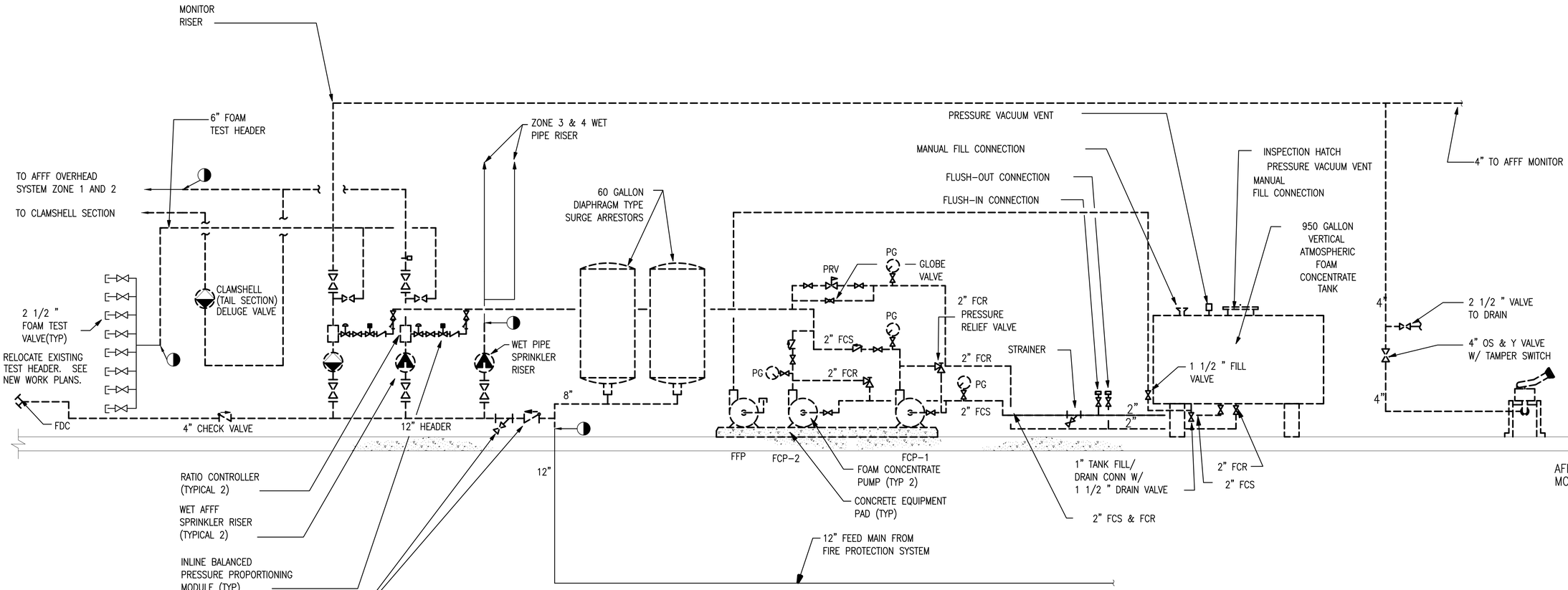

EXISTING FOAM SYSTEM SCHEMATIC – DEMOLITION

NO SCALE

REV #	DATE	DESCRIPTION

INSTALL FIRE SUPPRESSION, BUILDING 90029

EXISTING FOAM SYSTEM SCHEMATIC–DEMOLITION

AIR FORCE SPECIAL OPERATIONS COMMAND
1 SPECIAL OPERATIONS CIVIL ENGINEER SQUADRON
HURLBURT FIELD, FLORIDA

DATE: 22 JULY 2020
DESIGNED BY: F.C. BRADLEY
DRAWN BY: E. KIMMIG
BUILDING NUMBER: 90029
PROJECT NUMBER: CP1026753
SHEET REFERENCE: **FD701**
SHEET NUMBER: 9 OF 35

FREDERICK CHARLES BRADLEY LICENSE No.38898 STATE OF FLORIDA PROFESSIONAL ENGINEER
7/20/20

PETERSON ENGINEERING INC.
(PROF. ENG. #: 3600)
75 SOUTH "F" STREET
PENSACOLA, FLORIDA 32502
(850) 434-0513
PEI JOB #2018042

D:\PROJECT\2018\18042 Repair Fire Suppression Hangar 90029\DWG\Fire\18042FD701.dwg, 9/29/2020 10:33:09 AM

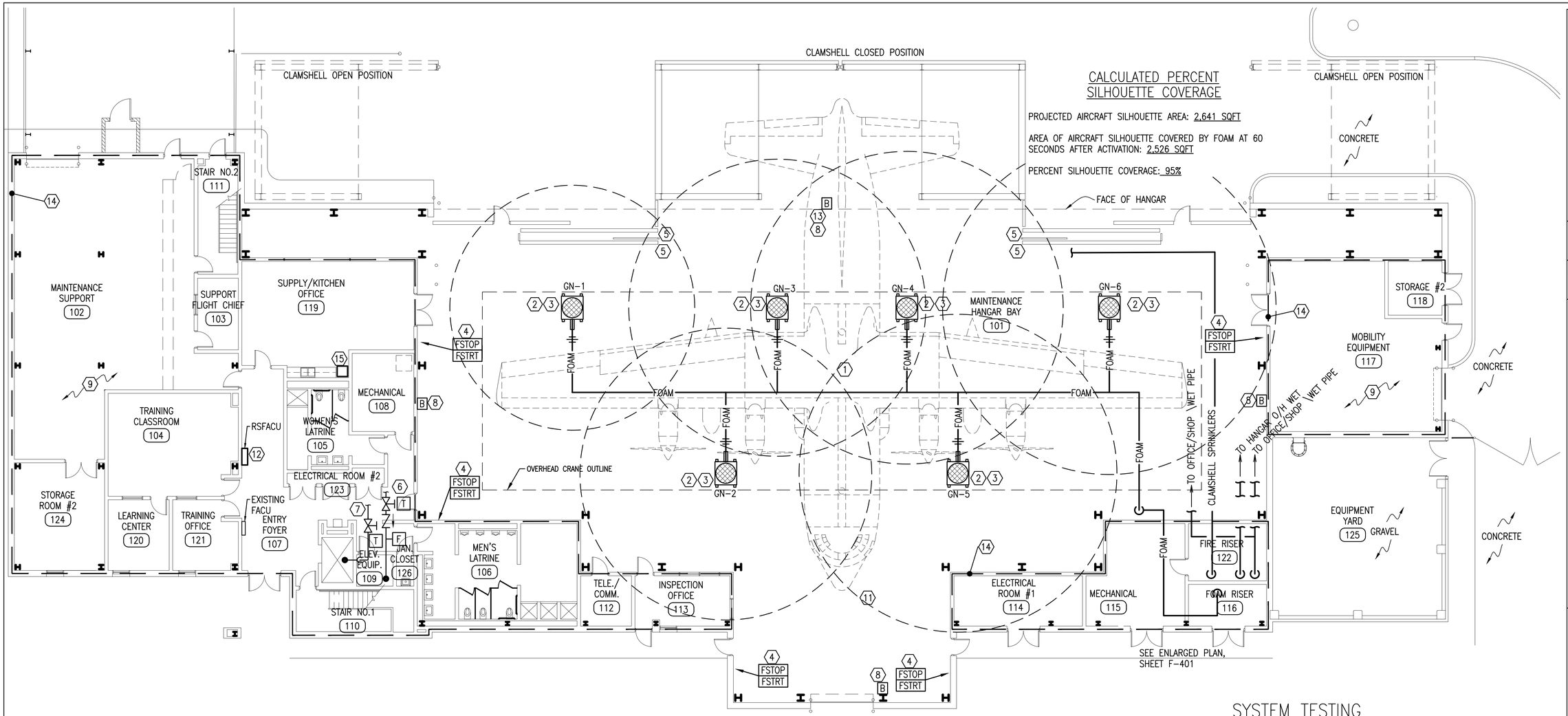

LOWER LEVEL/HI-EX FOAM FIRE PROTECTION PLAN-NEW WORK

SCALE: 1" = 10'-0"

SHEET NOTES

1. PROVIDE AND INSTALL LOW-LEVEL HIGH EXPANSION FOAM SYSTEM IN ACCORDANCE WITH UFC 4-211-01 13 APRIL 2017 WITH CHANGE 1, NOVEMBER 2017.
2. FOAM GENERATORS SUPPORTED FROM OVERHEAD STRUCTURE, TYPICAL.
3. PROVIDE LINE SIZED FLEX PIPE CONNECTOR, STRAINER, FLANGE CONNECTION AND SHUT OFF VALVE, AT EACH FOAM GENERATOR.
4. FOAM START/STOP STATIONS LOCATED AT SAME EXITS AS FIRE ALARM PULL STATIONS BUT ON OPPOSITE SIDE OF DOOR AS FIRE ALARM PULL STATIONS.
5. PROVIDE AND INSTALL SIGN ON BOTH SIDES OF HANGAR DOORS THAT STATE HANGAR DOORS SHALL REMAIN OPEN TO EDGE OF CLAMSHELL WHEN CLAMSHELL IS CLOSED TO ALLOW FOAM TO SPREAD INTO THE CLAMSHELL IN THE EVENT OF FOAM/WATER SYSTEM ACTIVATION.
6. EXTEND THE EXISTING WET PIPE SPRINKLER SYSTEM TO PROTECT THE ELEVATOR MACHINE ROOM. THE PIPING TO THE SPRINKLER SHALL INCLUDE A FLOW SWITCH, CHECK VALVE, ISOLATION VALVE WITH TAMPER AND A TEST VALVE WITH DRAIN PER UFC 3-600-01. THESE ITEMS MUST BE LOCATED OUTSIDE OF AND ADJACENT TO THE MACHINE ROOM. SEE DETAIL ON SHEET F-501.
7. EXTEND THE EXISTING WET PIPE SPRINKLER SYSTEM TO PROVIDE A SPRINKLER IN THE ELEVATOR PIT. INCLUDE AN ISOLATION VALVE (WITH TAMPER) IN THE SUPPLY PIPE PER UFC 3-600-01.
8. PROVIDE AND INSTALL WALL MOUNTED BLUE BEACON. MOUNT 20'-30' AFF IAW UFC-3-211-01 PARAGRAPH 5-6.4.
9. EXISTING WET PIPE SYSTEM SERVING THE SHOP/OFFICE AREAS TO REMAIN. SEE NOTE 15 THIS SHEET FOR SPRINKLER NEW WORK.
10. ALL FOAM AND WATER PIPING SHALL BE PAINTED AND LABELED IN ACCORDANCE WITH PROJECT SPECIFICATIONS.
11. CALCULATED 60 SECOND FOAM SPREAD RADIUS.
12. PROVIDE AND INSTALL NEW RELEASING SERVICE FIRE ALARM CONTROL UNIT (RSFACU) IN ACCORDANCE WITH UFC 4-211-01 AND RELEASING PANEL MANUFACTURER'S REQUIREMENTS.
13. BLUE BEACON SHALL BE WEATHER PROOF. MOUNT BLUE BEACON ON EXTERIOR FACE OF HANGAR TO PROVIDE WARNING TO CLAMSHELL OCCUPANTS.
14. CONTRACTOR SHALL REMOVE ALL EXISTING SPRINKLERS IN THE INDICATED AREA AND REPLACE WITH NEW. SEE SPRINKLER REPLACEMENT SCHEDULE ON SHEET F-602 FOR SPRINKLER TYPES. CONTRACTOR SHALL BE RESPONSIBLE FOR REPAIRING ANY LEAKS AT THE SPRINKLER JOINT.
15. PROPOSED LOCATION FOR THE FOAM SYSTEM POWER SUPPLY CABINET.. FINAL LOCATION OF POWER SUPPLY CABINET SHALL BE COORDINATED WITH THE USER AND CONTRACTING OFFICER AT THE TIME OF INSTALLATION.

SYSTEM TESTING

A. SEE SPEC. SECTION FOR TESTING OF THE FOAM SYSTEM.

B. DURING TESTING, THE CLAMSHELL DOORS SHALL BE IN THE CLOSED POSITION AND THE HANGAR DOORS SHALL BE PARTIALLY OPEN AS INDICATED ON THE ABOVE FLOOR PLAN. THE CLAMSHELL AREA SHALL BE TREATED AS PART OF THE HANGAR FLOOR AND THE FOAM SHALL SPREAD FROM INSIDE THE HANGAR INTO THE CLAMSHELL FLOOR AREA.

C. IN ADDITION TO THE TESTING REQUIREMENTS IN THE SPECIFICATION THE CONTRACTOR SHALL BE REQUIRED TO PROVIDE 8 HOURS OF TRAINING THAT SHALL INCLUDE HOW TO TEST THE FOAM SYSTEM. THIS TRAINING SHALL INCLUDE A FOAM TEST. IT IS ACCEPTABLE TO SCHEDULE THIS TRAINING FOR THE DAY BEFORE THE WITNESSED FINAL SYSTEM FOAM TEST.

MATERIAL SPECIFICATIONS

THE FOLLOWING MATERIALS SHALL BE USED FOR THIS CONTRACT:

1. ABOVE-GROUND SPRINKLER PIPING SHALL BE SCH 40 BLK STEEL, NO EXCEPTIONS.
2. CONCENTRATE PIPING SHALL BE STAINLESS STEEL.

FREDERICK CHARLES BRADLEY LICENSE No.38898 STATE OF FLORIDA PROFESSIONAL ENGINEER 7/20/20

PETERSON ENGINEERING INC.
(PROF. ENG. #: 3600)
75 SOUTH "F" STREET
PENSACOLA, FLORIDA 32502
(850) 434-0513
PEI JOB #2018042

REV #	DATE	DESCRIPTION

INSTALL FIRE SUPPRESSION, BUILDING 90029

LOWER LEVEL/HI-EX FOAM FIRE PROTECTION PLAN-NEW WORK

AIR FORCE SPECIAL OPERATIONS COMMAND
1 SPECIAL OPERATIONS CIVIL ENGINEER SQUADRON
HURLBURT FIELD, FLORIDA

DATE:	22 JULY 2020
DESIGNED BY:	F.C. BRADLEY
DRAWN BY:	E. KIMMIG
BUILDING NUMBER:	90029
PROJECT NUMBER:	CP1026753
SHEET REFERENCE:	F-101
SHEET NUMBER:	10 OF 35

D:\PROJECT\2018\18042 Repair Fire Suppression Hangar 90029\DWG\Fire\18042F-101.dwg, 9/29/2020 10:33:16 AM

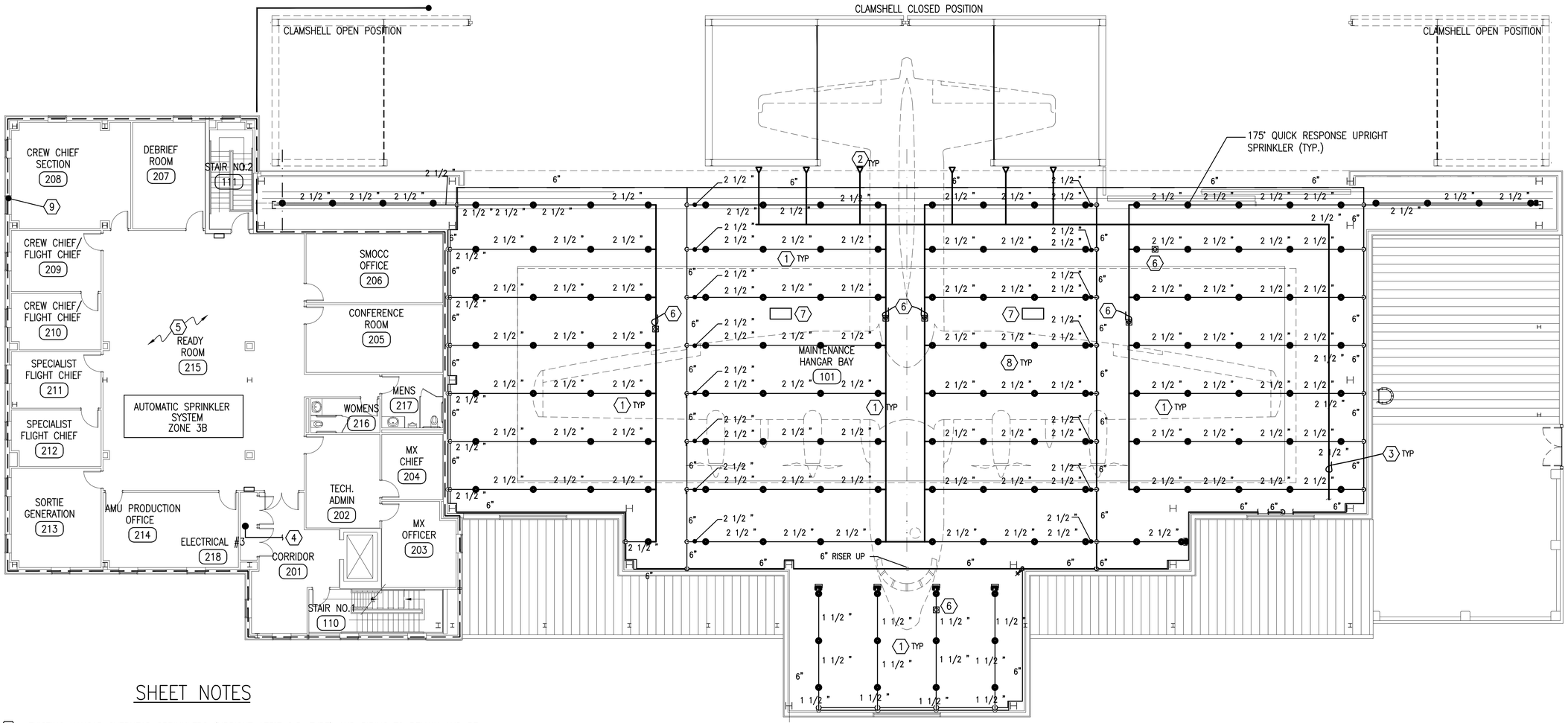

SHEET NOTES

1. EXISTING HANGAR OVERHEAD SPRINKLERS (UPRIGHT 175°F Q.R. TYPE) AND PIPING TO REMAIN AND BE REUSED, COMPLETE THROUGHOUT HANGAR BAY AND HANGAR DOOR POCKETS. PIPING SHALL BE CLEANED AND RINSED.
2. PROVIDE AND INSTALL NEW EXTENDED COVERAGE, ORDINARY HAZARD, DRY TYPE SPRINKLERS TO PROVIDE SPRINKLER COVERAGE TO CLAMSHELL AREA. THE AIR FORCE CIVIL ENGINEER CENTER (AFCEC) HAS APPROVED THE USE OF SIDEWALL SPRINKLERS FOR THE CLAMSHELL AND IS AWARE THAT THE SIDEWALL SPRINKLERS DO NOT MEET CODE REQUIREMENTS AND WILL NOT BE ABLE TO PROVIDE COMPLETE COVERAGE TO THE BACK WALL OF THE CLAMSHELL. THE SIDEWALL SPRINKLERS SHALL BE TYCO DS-# (TY5339) ECOH OR EQUAL.
3. NEW PIPING FOR SIDEWALL SPRINKLERS IN CLAMSHELL. SIZE PER CONTRACTORS HYDRAULIC CALCULATIONS.
4. CONTRACTOR SHALL EXTEND THE EXISTING WET PIPE SPRINKLER SYSTEM TO PROTECT THE COMMUNICATIONS CLOSET.
5. EXISTING SPRINKLER SYSTEM IN THIS AREA TO REMAIN AND BE REUSED. SEE NOTE 9 THIS SHEET FOR NEW WORK.
6. PROVIDE AND INSTALL AUTOMATIC AIR VENTS ON THE EXISTING FIRE SPRINKLER PIPING AT THE HIGH POINTS IN THE SYSTEM TO VENT AT LEAST 95% OF THE VOLUMETRIC CAPACITY OF THE SYSTEM. TIE SPRINKLER BRANCH ENDS TOGETHER TO REDUCE NUMBER OF AIR VENTS REQUIRED.
7. INSTALL FIXED TEMPERATURE SENSORS AT THE SAME HEIGHT AS THE WET SPRINKLER BRANCH LINES. LOW TEMPERATURE SENSORS SHALL BE INSTALLED IN ACCORDANCE WITH UFC 4-211-01. ROUTE SIGNAL WIRING TO FACU. SET TEMPERATURE AT 32°F.
8. ALL EXISTING AND NEW EXPOSED FIRE SUPPRESSION PIPING SHALL BE PAINTED AND LABELED IN ACCORDANCE WITH UFC 4-211-01 AND THE SPECIFICATIONS.
9. CONTRACTOR SHALL REMOVE ALL EXISTING SPRINKLERS IN INDICATED AREA AND REPLACE WITH NEW. SEE SPRINKLER REPLACEMENT SCHEDULE ON SHEET F-602 FOR SPRINKLER TYPES. CONTRACTOR SHALL BE RESPONSIBLE FOR REPAIRING ANY LEAKS AT THE SPRINKLER JOINT.

UPPER LEVEL FIRE PROTECTION PLAN – NEW WORK/EXISTING CONDITIONS

SCALE: 1" = 10'-0"

PETERSON ENGINEERING INC.
(PROF. ENG. #: 3600)
75 SOUTH "F" STREET
PENSACOLA, FLORIDA 32502
(850) 434-0513
PEI JOB #2018042

FREDERICK CHARLES BRADLEY LICENSE No.38898 STATE OF FLORIDA PROFESSIONAL ENGINEER 7/20/20

REV #	DATE	DESCRIPTION

INSTALL FIRE SUPPRESSION, BUILDING 90029

UPPER LEVEL FIRE PROTECTION PLAN–NEW WORK/EXISTING CONDITIONS

AIR FORCE SPECIAL OPERATIONS COMMAND
1 SPECIAL OPERATIONS CIVIL ENGINEER SQUADRON
HURLBURT FIELD, FLORIDA

DATE: 22 JULY 2020
DESIGNED BY: F.C. BRADLEY
DRAWN BY: E. KIMMIG
BUILDING NUMBER: 90029
PROJECT NUMBER: CP1026753
SHEET REFERENCE: F-102
SHEET NUMBER: 11 OF 35

D:\PROJECT\2018\18042 Repair Fire Suppression Hangar 90029\DWG\Fire\18042F-102.dwg, 9/29/2020 10:33:18 AM

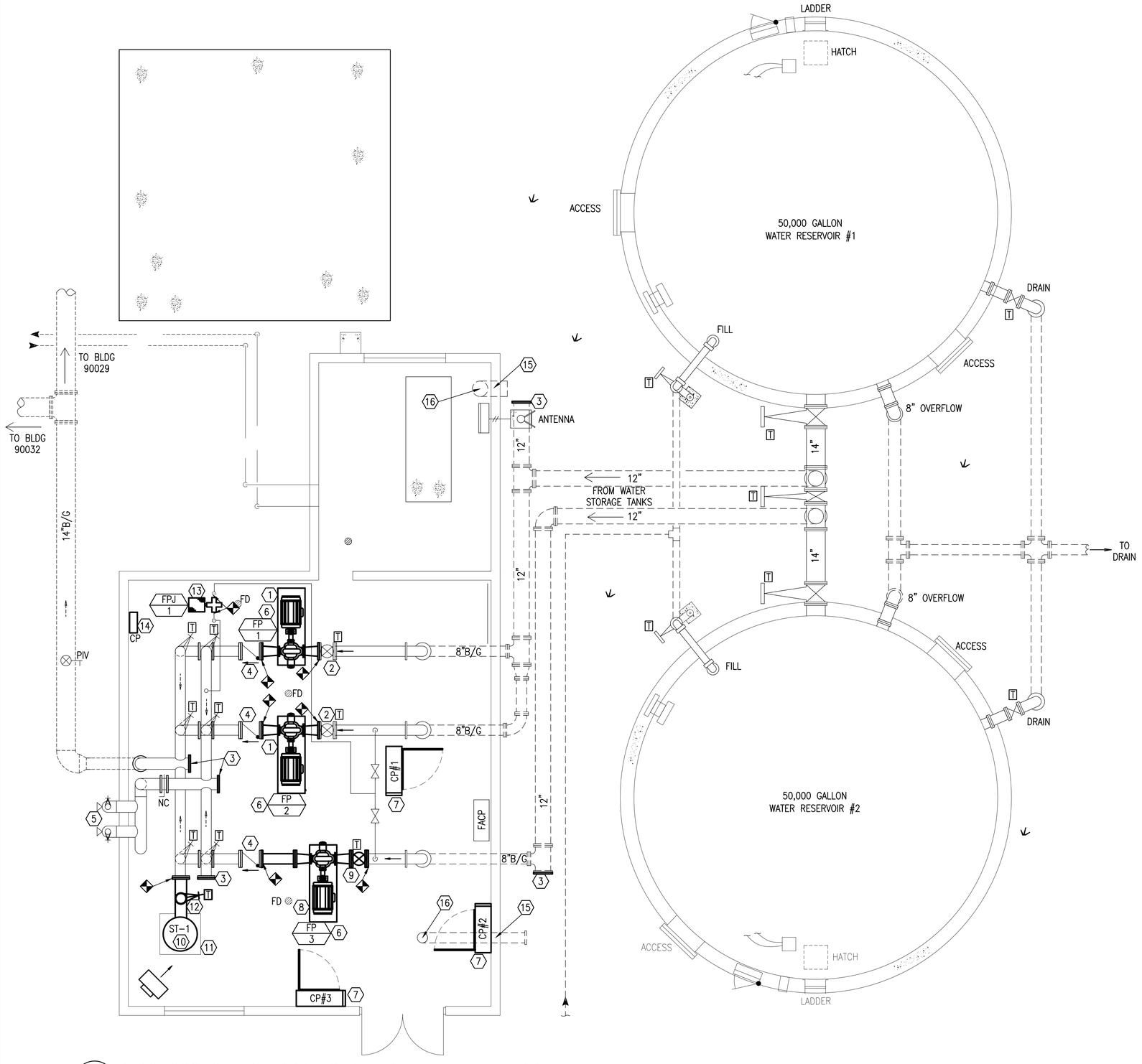

BLDG 90036 FIRE PROTECTION PLAN – NEW WORK

SCALE: 3/16" = 1'-0"

SHEET NOTES

GENERAL NOTE: FIRE PUMP DEMOLITION AND NEW WORK SHALL BE PHASED TO MINIMIZE SPRINKLER SYSTEM DOWNTIME. SEE SHEET F-001 FOR FIRE PUMP INSTALLATION PHASING NOTES.

1. EXISTING FIRE PUMP PAD SHALL BE MODIFIED AS REQURIED TO EXCEPT NEW FIRE PUMP.
2. EXISTING OS&Y VALVE TO REMAIN AND BE REUSED. RELOCATE UPSTREAM AS REQUIRED TO ALLOW NEW FIRE PUMP TO BE INSTALLED.
3. INSTALL NEW BLIND FLANGE.
4. EXISTING CHECK VALVE TO REMAIN AND BE REUSED.
5. EXISTING TEST HEADER TO REMAIN AND BE REUSED.
6. PROVIDE AND INSTALL NEW FIRE PUMP PER SCHEDULE ON SHEET F-602.
7. PROVIDE AND INSTALL FIRE PUMP CONTROLLER.
8. PROVIDE AND INSTALL NEW CONCRETE FIRE PUMP PAD.
9. PROVIDE AND INSTALL NEW OS&Y VALVE AND REUSE EXISTING TAMPER SWITCH.
10. PROVIDE AND INSTALL 300 GALLON, BLADDER TYPE SURGE TANK, ST-1. TANK SHALL BE UL LISTED AND FM APPROVED FOR USE IN FIRE PROTECTION SYSTEMS. TANK SHALL EXCEED ALL ASME SECTION VIII, DIVISION 1 STANDARDS. BLADDER SHALL BE A HEAVY DUTY REPLACEABLE TYPE. BASIS OF DESIGN AMTROL SURGE-TROL SPT-42.
11. PROVIDE AND INSTALL CONCRETE PAD TO SUPPORT NEW SURGE TANK.
12. PROVIDE AND INSTALL NEW OS&Y VALVE AND NEW TAMPER SWITCH.
13. PROVIDE AND INSTALL NEW JOCKEY PUMP PER SCHEDULE ON SHEET F-602..
14. PROVIDE AND INSTALL NEW JOCKEY PUMP CONTROLLER.
15. ABANDON PIPE UNDER BUILDING.
16. PIPING CUT BELOW FINISHED FLOOR AND GROUTED TO MATCH EXISTING FINISHED FLOOR.

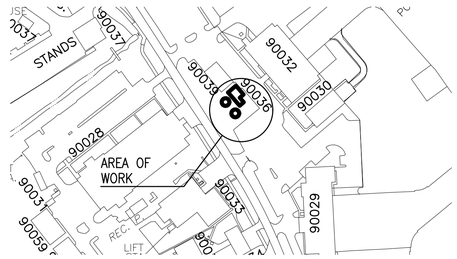

N

SITE PLAN
NO SCALE

PETERSON ENGINEERING INC.
(PROF. ENG. #: 3600)
75 SOUTH "F" STREET
PENSACOLA, FLORIDA 32502
(850) 434-0513
PEI JOB #2018042

FREDERICK CHARLES BRADLEY LICENSE No.36898 STATE OF FLORIDA PROFESSIONAL ENGINEER
7/20/20

REV #	DATE	DESCRIPTION

INSTALL FIRE SUPPRESSION, BUILDING 90029

BLDG 90036 FIRE PUMP HOUSE-NEW WORK

AIR FORCE SPECIAL OPERATIONS COMMAND
1 SPECIAL OPERATIONS CIVIL ENGINEER SQUADRON
HURLBURT FIELD, FLORIDA

DATE:	22 JULY 2020
DESIGNED BY:	F.C. BRADLEY
DRAWN BY:	E. KIMMIG
BUILDING NUMBER:	90029
PROJECT NUMBER:	CP1026753
SHEET REFERENCE:	F-103
SHEET NUMBER:	12 OF 35

D:\PROJECT\2018\18042 Repair Fire Suppression Hangar 90029\DWG\Fire\18042F-103.dwg, 9/29/2020 10:33:21 AM

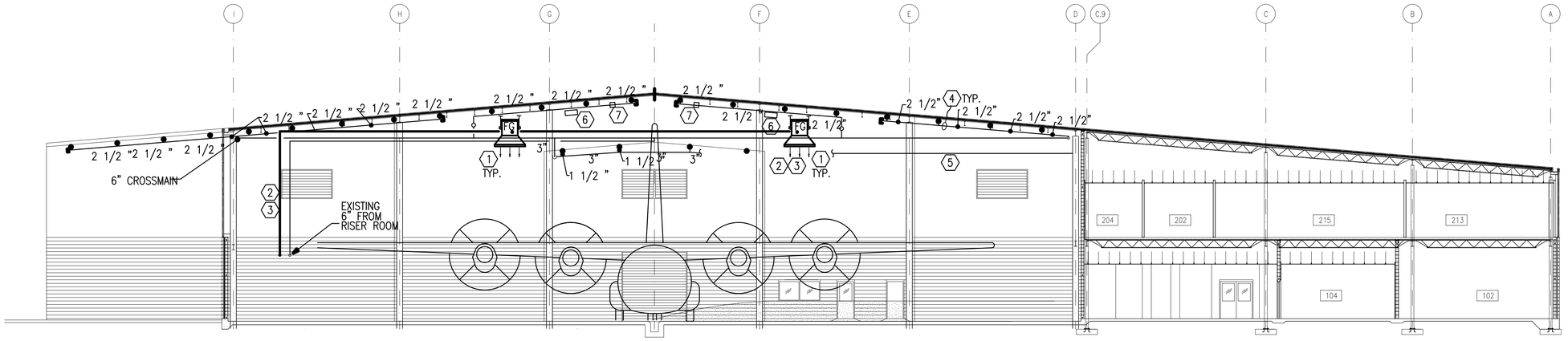

BUILDING FIRE PROTECTION SECTION–NEW WORK

SCALE: 1" = 10'–0"

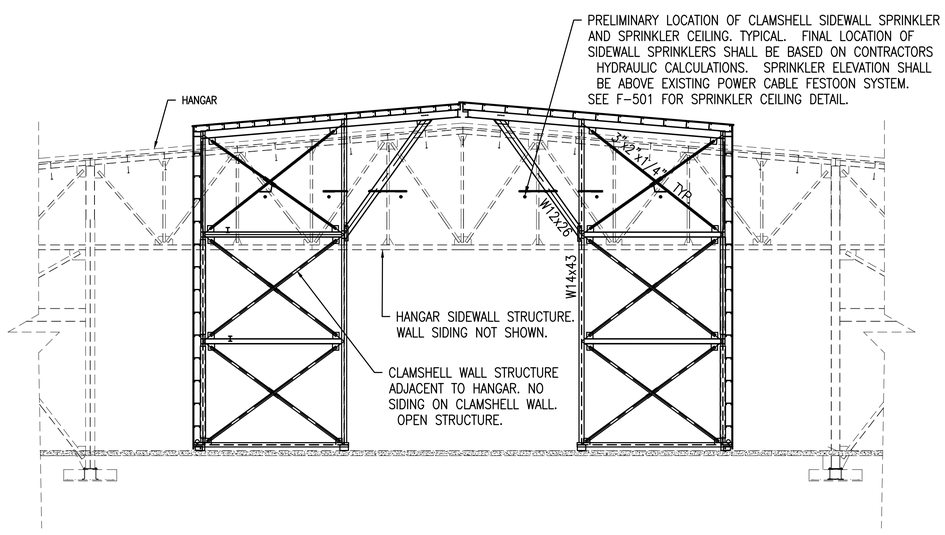

HANGAR AND CLAMSHELL STRUCTURE OVERLAY SECTION

SCALE: 1" = 10'–0"

SHEET NOTES

1. INSTALL FOAM GENERATORS, TYPICAL. SEE DETAIL SHEETS.
2. INSTALL FOAM GENERATORS AND PIPING TO CLEAR EXISTING DUCTWORK AND STRUCTURE. LOCATE GENERATORS HIGH ENOUGH THAT THEY DON'T INTERFERE WITH THE BRIDGE CRANE OPERATION.
3. THE FOAM PIPING SHALL BE LOCATED UP HIGH AND ROUTED SO AS TO NOT CREATE ANY CONFLICTS WITH ANY EQUIPMENT, DUCTWORK OR STRUCTURE.
4. EXISTING OVERHEAD WET PIPE SPRINKLER SYSTEM TO REMAIN.
5. INSURE ALL NEW EQUIPMENT DOES NOT BLOCK THE BRIDGE CRANE. THE CRANE SPANS THE ENTIRE HANGAR.
6. INSTALL FIXED TEMPERATURE SENSORS AT THE SAME HEIGHT AS THE WET SPRINKLER BRANCH LINES. LOW TEMPERATURE SENSORS SHALL BE INSTALLED IN ACCORDANCE WITH UFC 4–211–01. ROUTE SIGNAL WIRING TO FACU. SET TEMPERATURE AT 32°F.
7. INSTALL AUTOMATIC AIR VENTS AT THE HIGH POINTS IN THE SYSTEM, TYPICAL.

PETERSON ENGINEERING INC.
(PROF. ENG. #: 3600)
75 SOUTH "F" STREET
PENSACOLA, FLORIDA 32502
(850) 434–0513
PEI JOB #2018042

FREDERICK CHARLES BRADLEY LICENSE No.38888 STATE OF FLORIDA PROFESSIONAL ENGINEER 7/22/20

REV #	DATE	DESCRIPTION

INSTALL FIRE SUPPRESSION, BUILDING 90029

BUILDING FIRE PROTECTION SECTION–NEW WORK

AIR FORCE SPECIAL OPERATIONS COMMAND
1 SPECIAL OPERATIONS CIVIL ENGINEER SQUADRON
HURLBURT FIELD, FLORIDA

DATE:	22 JULY 2020
DESIGNED BY:	F.C. BRADLEY
DRAWN BY:	E. KIMMIG
BUILDING NUMBER:	90029
PROJECT NUMBER:	CP1026753
SHEET REFERENCE:	F–301
SHEET NUMBER:	13 OF 35

D:\PROJECT\2018\18042 Repair Fire Suppression Hangar 90029\DWG\Fire\18042F-301.dwg, 9/29/2020 10:33:23 AM

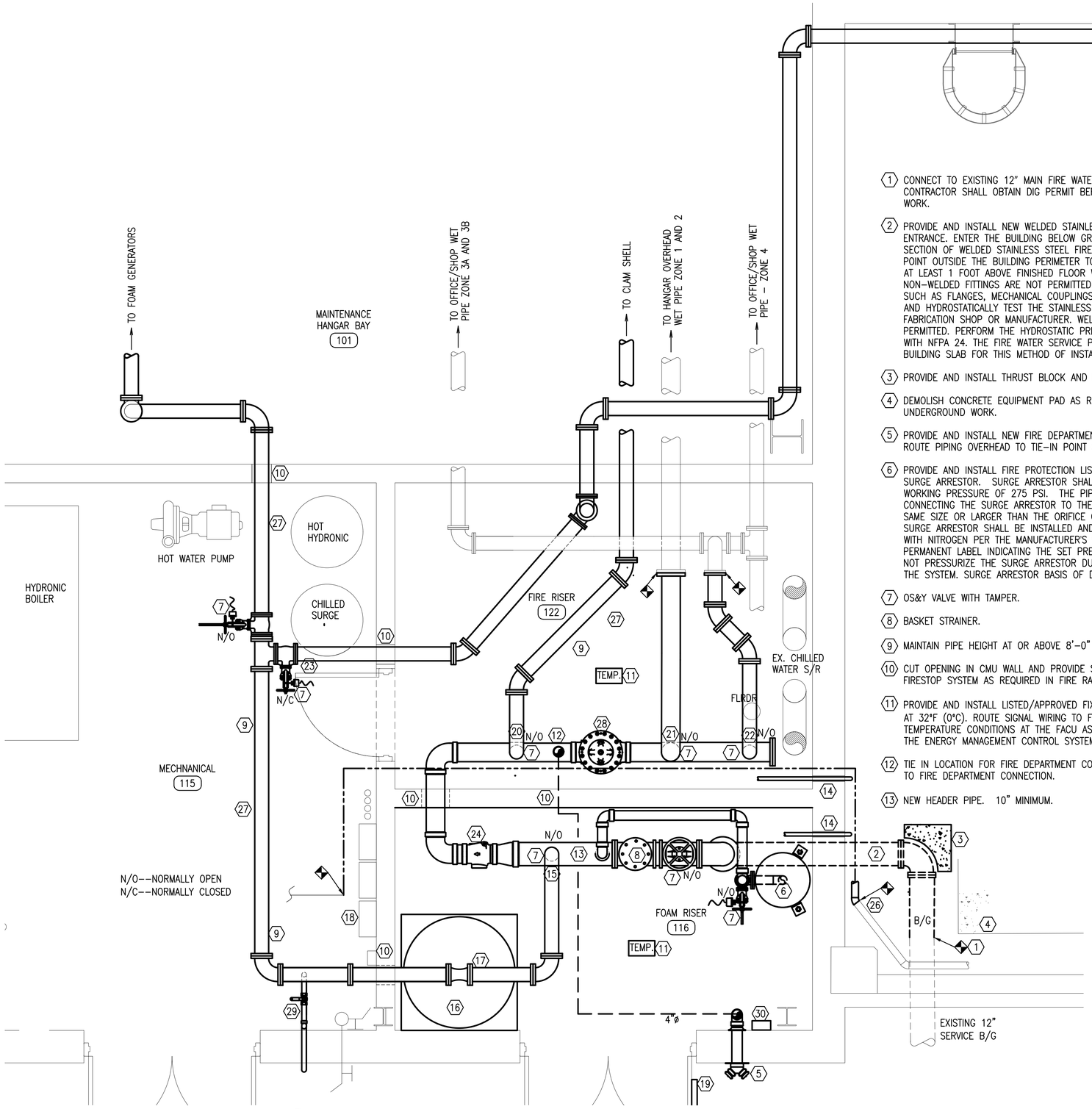

FIRE RISER EQUIPMENT ROOM
SCALE: 1/2" = 1'-0"

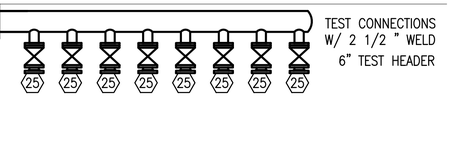

SHEET NOTES

1. CONNECT TO EXISTING 12" MAIN FIRE WATER SUPPLY FROM PUMP HOUSE. CONTRACTOR SHALL OBTAIN DIG PERMIT BEFORE BEGINNING UNDERGROUND WORK.
2. PROVIDE AND INSTALL NEW WELDED STAINLESS STEEL FIRE WATER PIPING ENTRANCE. ENTER THE BUILDING BELOW GRADE WITH A CONTINUOUS SECTION OF WELDED STAINLESS STEEL FIRE WATER SERVICE PIPING FROM A POINT OUTSIDE THE BUILDING PERIMETER TO A FLANGED FITTING LOCATED AT LEAST 1 FOOT ABOVE FINISHED FLOOR WITHIN THE BUILDING. NON–WELDED FITTINGS ARE NOT PERMITTED WITHIN THIS SECTION OF PIPING SUCH AS FLANGES, MECHANICAL COUPLINGS, AND PUSH–ON FITTINGS. WELD AND HYDROSTATICALLY TEST THE STAINLESS STEEL PIPE AT THE FABRICATION SHOP OR MANUFACTURER. WELDING IN THE FIELD IS NOT PERMITTED. PERFORM THE HYDROSTATIC PRESSURE TEST IN ACCORDANCE WITH NFPA 24. THE FIRE WATER SERVICE PIPING IS PERMITTED BELOW THE BUILDING SLAB FOR THIS METHOD OF INSTALLATION.
3. PROVIDE AND INSTALL THRUST BLOCK AND PIPE RESTRAINTS.
4. DEMOLISH CONCRETE EQUIPMENT PAD AS REQUIRED TO PERFORM UNDERGROUND WORK.
5. PROVIDE AND INSTALL NEW FIRE DEPARTMENT CONNECTION WITH SIGN. ROUTE PIPING OVERHEAD TO TIE–IN POINT ON WET SYSTEM RISER HEADER.
6. PROVIDE AND INSTALL FIRE PROTECTION LISTED OR APPROVED 25 GALLON SURGE ARRESTOR. SURGE ARRESTOR SHALL BE RATED FOR A MAXIMUM WORKING PRESSURE OF 275 PSI. THE PIPING, FITTINGS, AND VALVING CONNECTING THE SURGE ARRESTOR TO THE SYSTEM HEADER SHALL BE THE SAME SIZE OR LARGER THAN THE ORIFICE ON THE SURGE ARRESTOR. THE SURGE ARRESTOR SHALL BE INSTALLED AND PRESSURIZED IN THE FIELD WITH NITROGEN PER THE MANUFACTURER'S WRITTEN DIRECTIONS. PROVIDE A PERMANENT LABEL INDICATING THE SET PRESSURE OF THE ARRESTOR. DO NOT PRESSURIZE THE SURGE ARRESTOR DURING HYDROSTATIC TESTING OF THE SYSTEM. SURGE ARRESTOR BASIS OF DESIGN IS AMTROL SPT–3.
7. OS&Y VALVE WITH TAMPER.
8. BASKET STRAINER.
9. MAINTAIN PIPE HEIGHT AT OR ABOVE 8'–0" AFF.
10. CUT OPENING IN CMU WALL AND PROVIDE SLEEVE. PROVIDE UL LISTED FIRESTOP SYSTEM AS REQUIRED IN FIRE RATED WALLS.
11. PROVIDE AND INSTALL LISTED/APPROVED FIXED TEMPERATURE SENSORS SET AT 32°F (0°C). ROUTE SIGNAL WIRING TO FACU AND ALARM LOW TEMPERATURE CONDITIONS AT THE FACU AS A SUPERVISORY CONDITION AND THE ENERGY MANAGEMENT CONTROL SYSTEM.
12. TIE IN LOCATION FOR FIRE DEPARTMENT CONNECTION. ROUTE OVER HEAD TO FIRE DEPARTMENT CONNECTION.
13. NEW HEADER PIPE. 10" MINIMUM.
14. ROUTE RISER DRAIN PIPE TO THE EXTERIOR. PROVIDE SPLASH BLOCK AT DRAIN DISCHARGE.
15. INSTALL NEW HIGH EXPANSION FOAM SYSTEM RISER. RISER TO BE EQUIPPED WITH AN ELECTRICALLY OPERATED FLOW CONTROL VALVE.
16. INSTALL ATMOSPHERIC POLYETHYLENE DOUBLE WALLED FOAM CONCENTRATE TANK. PROVIDE WITH 6"THICK REINFORCED CONCRETE PAD. TANK SHALL BE COMPATIBLE WITH THE REQUIRED CONCENTRATE. PROVIDE A CLOSEABLE FILL OPENING AND PRESSURE/VACUUM VENT ASSEMBLY. ENTER THE TANK ONLY THROUGH THE TOP WITH NO TAPS ON THE BOTTOM OR SIDES OF THE TANK.
17. CONTRACTOR SHALL ROUTE FOAM/WATER SUPPLY AS REQUIRED TO PROVIDE THE MANUFACTURERS REQUIRED STRAIGHT RUN OF PIPE UPSTREAM AND DOWNSTREAM OF THE INDUCTOR.
18. EXISTING DDC CONTROL PANELS.
19. REMOVE AND REPLACE THE ROOM SIGNAGE. NEW SIGN WILL READ"116 FOAM ROOM". THE ROOM SIGN SHALL MATCH THE EXISTING FACILITY EXTERIOR ROOM SIGNS IN ALL ASPECTS.
20. INSTALL NEW CLAMSHELL WET PIPE RISER. RISER TO BE EQUIPPED WITH A RISER CHECK VALVE. SEE PIPING DIAGRAM ON SHEET F–601.
21. INSTALL NEW HANGAR OVERHEAD WET PIPE RISER. RISER TO BE EQUIPPED WITH A RISER CHECK VALVE. ROUTE AND CONNECT TO EXISTING PIPING. RISER SIZE TO MATCH EXISTING PIPING SIZE.
22. INSTALL NEW OFFICE/SHOP WET PIPE RISER. RISER TO BE EQUIPPED WITH A RISER CHECK VALVE. ROUTE AND CONNECT TO EXISTING PIPING. RISER SIZE TO MATCH EXISTING PIPING SIZE.
23. INSTALL FOAM TEST HEADER PIPING WITH ISOLATION VALVES IN BOTH THE HEADER AND FOAM SUPPLY PIPING.
24. PROVIDE AND INSTALL NEW CHECK VALVE.
25. EXISTING TEST HEADER AND CONNECTIONS SHALL BE RELOCATED AS INDICATED.
26. EXISTING 3" GAS LINE, (PAINTED BLUE INSIDE BUILDING). REMOVE GAS PIPING INSIDE OF FOAM RISER ROOM 116 AND REROUTE THROUGH FIRE RISER ROOM 122 TO MECHANICAL ROOM 115. PIPING AND MATERIALS SHALL MATCH EXISTING.
27. ADJUST PIPE ROUTE AS NEEDED TO ACCOMMODATE EXISTING MECHANICAL PIPING.
28. PRESSURE REDUCING VALVE. SET PRESSURE SHALL BE BASED ON CONTRACTORS HYDRAULIC CALCULATIONS. BASIS OF DESIGN CLA–VAL 90G–21.
29. PROVIDE FOAM/WATER SYSTEM DRAIN DOWNSTREAM OF THE INDUCTOR. DRAIN VALVE SHALL BE LOCKED IN THE CLOSED POSITION. DRAIN SHALL BE ROUTED TO THE EXTERIOR TO A LOCATION WERE THE DISCHARGE CAN BE CONTAINED AND COLLECTED.
30. NEW REMOTE RELEASING PANEL (DET–TRONICS ENHANCED DISCRETE I/O MODULE (EDIO)) (APPROX. 8"X8"X4").

PETERSON ENGINEERING INC.
(PROF. ENG. #: 3600)
75 SOUTH "F" STREET
PENSACLA, FLORIDA 32502
(850) 434–0513
PEI JOB #2018042

FREDERICK CHARLES BRADLEY LICENSE No.36898 STATE OF FLORIDA PROFESSIONAL ENGINEER
7/20/20

REV #	DATE	DESCRIPTION

INSTALL FIRE SUPPRESSION, BUILDING 90029

ENLARGED FIRE RISER/EQUIPMENT ROOM PLAN–NEW WORK

AIR FORCE SPECIAL OPERATIONS COMMAND
1 SPECIAL OPERATIONS CIVIL ENGINEER SQUADRON
HURLBURT FIELD, FLORIDA

DATE:	22 JULY 2020
DESIGNED BY:	F.C. BRADLEY
DRAWN BY:	E. KIMMIG
BUILDING NUMBER:	90029
PROJECT NUMBER:	CP1026753
SHEET REFERENCE:	F–401
SHEET NUMBER:	14 OF 35

D:\PROJECT\2018\18042 Repair Fire Suppression Hangar 90029\DWG\Fire\18042F-401.dwg, 9/29/2020 10:33:26 AM

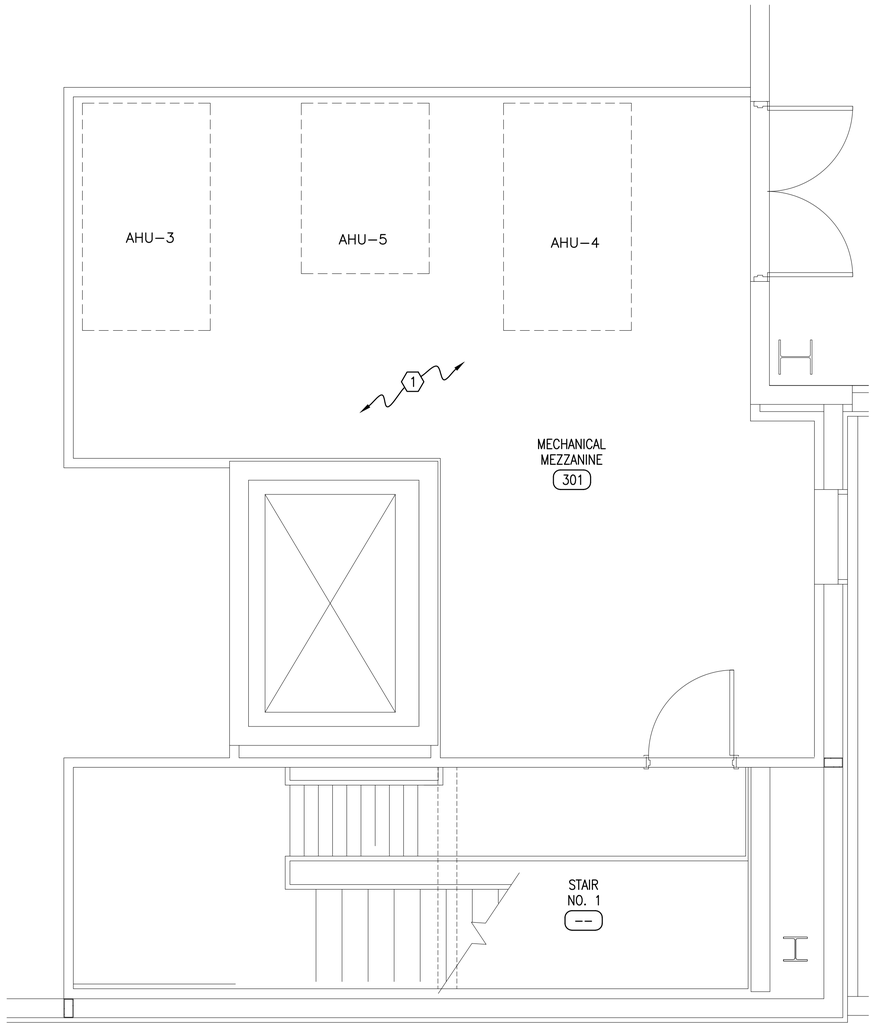

ENLARGED MECHANICAL MEZZANINE PLAN-NEW WORK
SCALE: 1/2" = 1'-0"

SHEET NOTES

1. CONTRACTOR SHALL REMOVE ALL EXISTING SPRINKLERS IN INDICATED AREA AND REPLACE WITH NEW. SEE SPRINKLER REPLACEMENT SCHEDULE ON SHEET F-602 FOR SPRINKLER TYPES CONTRACTOR SHALL BE RESPONSIBLE FOR REPAIRING ANY LEAKS AT THE SPRINKLER JOINT.

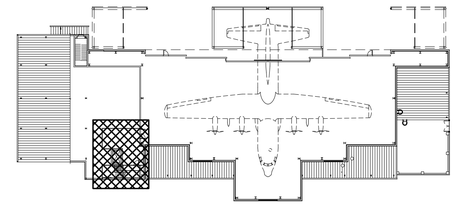

KEY PLAN
NOT TO SCALE

PETERSON ENGINEERING INC.
(PROF. ENG. #: 3600)
75 SOUTH "F" STREET
PENSACOLA, FLORIDA 32502
(850) 434-0513
PEI JOB #2018042

FREDERICK CHARLES BRADLEY LICENSE No.38898 STATE OF FLORIDA PROFESSIONAL ENGINEER
7/20/20

REV #	DATE	DESCRIPTION

INSTALL FIRE SUPPRESSION, BUILDING 90029

ENLARGED MECHANICAL MEZZANINE PLAN-DEMOLITION & NEW WORK

AIR FORCE SPECIAL OPERATIONS COMMAND
1 SPECIAL OPERATIONS CIVIL ENGINEER SQUADRON
HURLBURT FIELD, FLORIDA

DATE:	22 JULY 2020
DESIGNED BY:	F.C. BRADLEY
DRAWN BY:	E. KIMMIG
BUILDING NUMBER:	90029
PROJECT NUMBER:	CP1026753
SHEET REFERENCE:	F-402
SHEET NUMBER:	15 OF 35

D:\PROJECT\2018\18042 Repair Fire Suppression Hangar 90029\DWG\Fire\18042F-402.dwg, 9/29/2020 10:33:28 AM

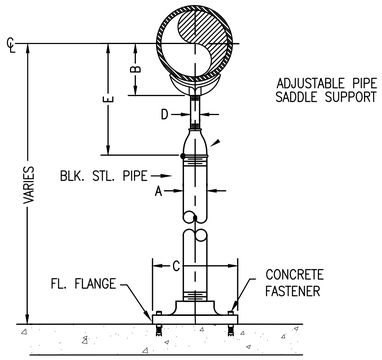

FLOOR PIPE SUPPORT DETAIL

NOT TO SCALE

DIMENSIONS					
PIPE SIZE(IN)	A(IN)	B(IN)	C(IN)	D(IN)	E(IN)
2-1/2	2-1/2	3-7/16	9	1-1/2	8-13
3	2-1/2	3-11/16	9	1-1/2	8 1/4-13 3/4
4	3	4-3/16	9	2-1/2	9 1/2-14
6	3	5-7/16	9	2-1/2	10 1/2-15 1/4
8	3	6-15/16	9	2-1/2	11 3/4-16 1/2
10	3	8-7/16	9	2-1/2	13 1/2-18 1/4

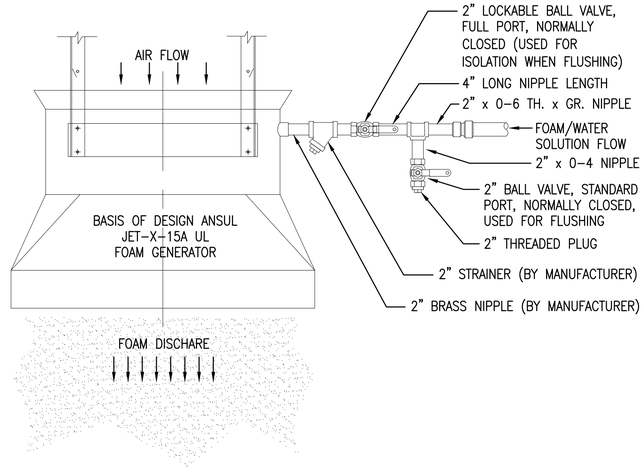

FOAM GENERATOR PIPING DETAIL

NOT TO SCALE

DETAIL NOTES

1. EXISTING FIRE SPRINKLER SUPPLY
2. GATE VALVE WITH SUPERVISORY SWITCH
3. WATER FLOW SUPERVISORY SWITCH. THE WATER FLOW SWITCH SHALL HAVE NO TIME DELAY CAPABILITY.
4. DRAIN VALVE
5. GATE VALVE (TEST VALVE)
6. SIGHT GLASS
7. UNION WITH CORROSION RESISTANT ORIFICE GIVING FLOW EQUIVALENT TO THE SMALLEST SPRINKLER ORIFICE IN THE ZONE.
8. PROVIDE DRAIN TO BUILDING EXTERIOR. DISCHARGE ON CONCRETE SPLASH BLOCK.
9. TO SPRINKLER ZONE
10. PRESSURE GAUGE WITH GAUGE COCK
11. CHECK VALVE

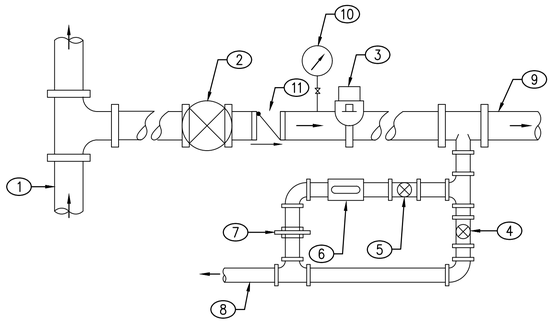

NOTE: ACTUATION OF THE WATERFLOW SWITCH MUST REMOVE POWER TO THE ELEVATOR BY DIRECT CONNECTION FROM THE WATERFLOW SWITCH TO THE SHUNT TRIP BREAKER.

ELEVATOR MACHINE ROOM SPRINKLER SUPPLY DETAIL

NOT TO SCALE

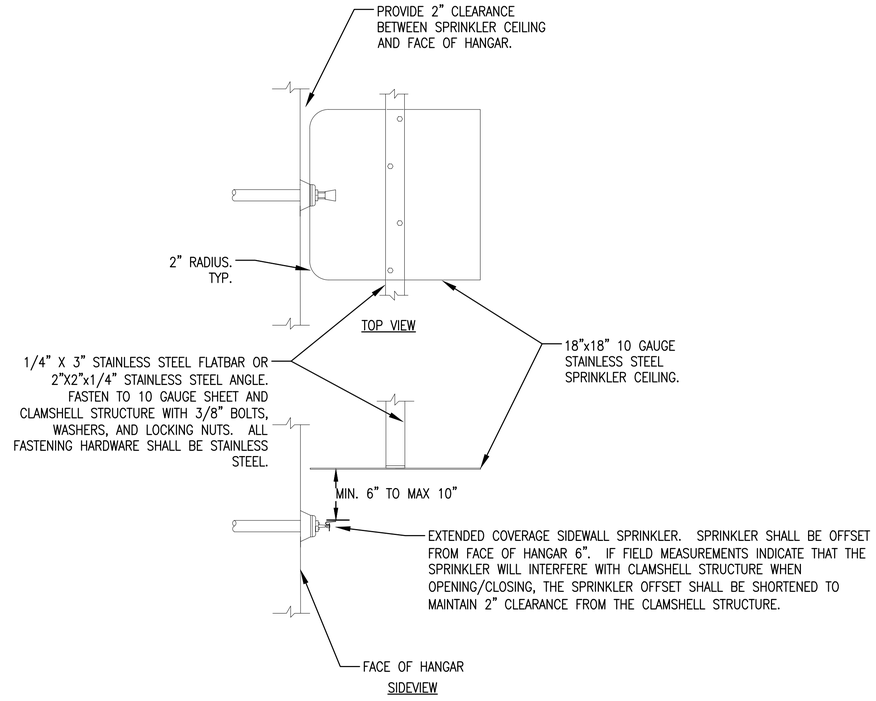

NOTE: CONTRACTOR SHALL SUBMIT SHOP DRAWINGS THAT INDICATE THE FINAL LOCATION OF CLAMSHELL SPRINKLERS AND SPRINKLER CEILINGS. SHOP DRAWINGS SHALL INDICATE THE METHODS FOR FASTENING THE SPRINKLER CEILINGS TO THE CLAMSHELL STRUCTURE AND THE CLEARANCE DISTANCE FROM THE FACE OF THE HANGAR.

CLAMSHELL SPRINKLER CEILING DETAIL

NOT TO SCALE

PETERSON ENGINEERING INC.
(PROF. ENG. #: 3600)
75 SOUTH "F" STREET
PENSACOLA, FLORIDA 32502
(850) 434-0513
PEI JOB #2018042

FREDERICK CHARLES BRADLEY LICENSE No.38898 STATE OF FLORIDA PROFESSIONAL ENGINEER 7/22/20

REV #	DATE	DESCRIPTION

INSTALL FIRE SUPPRESSION, BUILDING 90029

FIRE PROTECTION DETAILS

AIR FORCE SPECIAL OPERATIONS COMMAND
1 SPECIAL OPERATIONS CIVIL ENGINEER SQUADRON
HURLBURT FIELD, FLORIDA

DATE: 22 JULY 2020
DESIGNED BY: F.C. BRADLEY
DRAWN BY: E. KIMMIG
BUILDING NUMBER: 90029
PROJECT NUMBER: CP1026753
SHEET REFERENCE: **F-501**
SHEET NUMBER: 16 OF 35

D:\PROJECT\2018\18042 Repair Fire Suppression Hangar 90029\DWG\Fire\18042F-501.dwg, 9/29/2020 10:33:30 AM

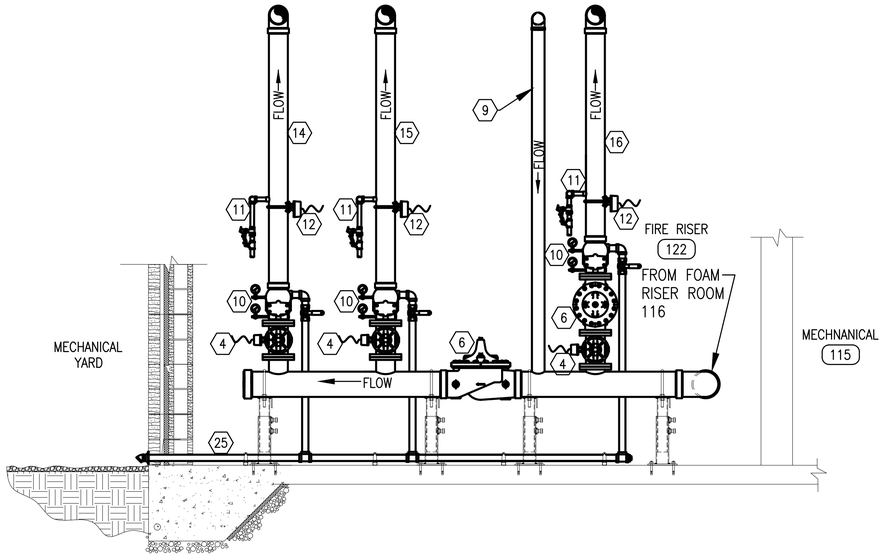

1 FIRE PROTECTION RISER DIAGRAM
FIRE RISER ROOM 122
NOT TO SCALE

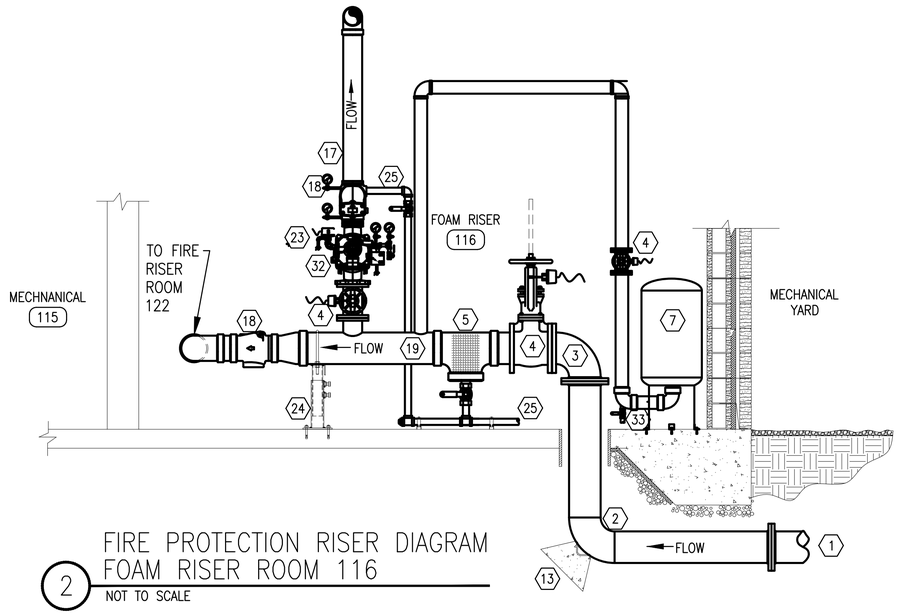

2 FIRE PROTECTION RISER DIAGRAM
FOAM RISER ROOM 116
NOT TO SCALE

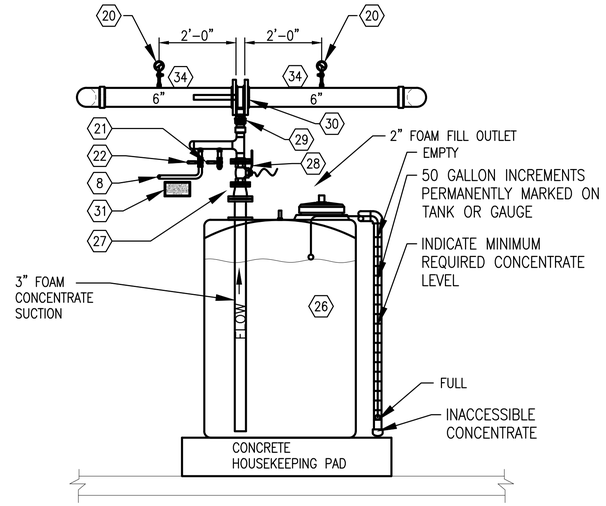

3 FOAM CONCENTRATE PIPING DIAGRAM
NOT TO SCALE

FOAM CONCENTRATE NOTE

PROVIDE HI-EX FOAM CONCENTRATE LISTED/APPROVED FOR USE WITH THE FOAM GENERATION SYSTEM. PROVIDE A CONCENTRATE STORAGE TANK WITH A SUPPLY OF CONCENTRATE TO SUPPORT A 15 MINUTE DISCHARGE AT THE HYDRAULICALLY CALCULATED WATERFLOW RATE AND 130% OF THE NOMINAL CONCENTRATE INJECTION RATE.

SHEET NOTES

1. FIRE WATER SUPPLY FROM NEW FIRE PUMPS
2. CONTINUOUSLY WELDED STAINLESS STEEL FIRE WATER PIPING ENTRANCE.
3. SCHEDULE 40 BLACK STEEL
4. OS&Y WITH TAMPER SWITCH
5. BASKET STRAINER
6. PRESSURE REDUCING VALVE. PRESSURE SHALL BE SET BASED ON CONTRACTORS HYDRAULIC CALCULATIONS.
7. 25 GALLON SURGE ARRESTOR.
8. 3/4" COPPER LINE FROM FIRE WATER SUPPLY USED FOR FLUSHING INDUCTOR AFTER TESTING.
9. 4" FROM FIRE DEPARTMENT CONNECTION.
10. RISER CHECK VALVE
11. INSPECTORS TEST VALVE & PRESSURE RELIEF VALVE ASSEMBLY. INSPECTION TEST SHALL DISCHARGE TO EXTERIOR OF BLDG.
12. WATER FLOW SWITCH.
13. CONCRETE THRUST BLOCK (AS REQUIRED).
14. OFFICE/SHOP WET PIPE SPRINKLER RISER.
15. HANGAR OVERHEAD WET PIPE SYSTEM RISER.
16. CLAMSHELL WET SYSTEM RISER.
17. HIGH EXPANSION FOAM SYSTEM RISER.
18. CHECK VALVE.
19. SUPPLY HEADER. MINIMUM 10".
20. LIQUID FILLED GAUGE WITH SHUT OFF VALVE
21. BALL VALVE WITH CAP AND TEST CONNECTION.
22. FLUSHING BALL VALVE
23. REMOTE RELEASE SOLENOID VALVE.
24. FLOOR PIPE STAND. TYPICAL.
25. MAIN DRAIN TO EXTERIOR.
26. DOUBLE WALL POLY FOAM CONCENTRATE TANK. PROVIDE 1/4" LAYER OF MINERAL OIL ON TOP OF CONCENTRATE, AFTER STORAGE TANK HAS BEEN FILLED.
27. 3"X2" FLANGED REDUCER, STAINLESS STEEL
28. BALL VALVE, STAINLESS STEEL, FLANGED, PROVIDED BY FOAM MFR.
29. INTEGRAL CHECK VALVE ON FOAM INDUCTOR
30. FOAM INDUCTOR
31. FLUSH CONCENTRATE SIGN AFTER TESTING, "FLUSH CONCENTRATE LINE AFTER DISCHARGE OR TESTING. CLOSE CONCENTRATE TANK SHUTOFF VALVE PRIOR TO RE-OPINGING THIS VALVE. AFTER FLUSHING, DRAIN CONCENTRATE LINE THROUGH TEST CONNECTION PRIOR TO RE-OPENING CONCENTRATE TANK SHUTOFF VALVE."
32. PROVIDE A FLOW CONTROL VALVE WITH REMOTE RESETTING CAPABILITY FOR THE FOAM/WATER SYSTEM. PROVIDE FLOW CONTROL VALVE WITH AUTOMATIC RE-CLOSING FEATURE AND ADJUSTABLE SPEED CONTROL. PROVIDE FIELD ADJUSTABLE PRESSURE REDUCING TRIM. INSTALL THE MANUAL RELEASE FOR THE FLOW CONTROL VALVE NO HIGHER THAN 5 FT. (1524 MM) ABOVE FINISHED FLOOR. FOR HYDRAULIC CALCULATIONS, INCLUDE THE MANUFACTURER'S MINIMUM PRESSURE DROP ACROSS FLOW CONTROL VALVE FOR THE FEATURES INDICATED. THE FLOW CONTROL VALVE SHALL BE CAPABLE OF MEETING THE OPENING AND CLOSING TIME REQUIREMENTS LISTED IN THE SEQUENCE OF OPERATIONS ON SHEET F-603 AND IN THE SPECIFICATIONS.
33. PROVIDE DRAIN FOR SURGE ARRESTOR.
34. PROVIDE THE MINIMUM STRAIGHT PIPE ON BOTH SIDES OF THE INDUCTOR IN ACCORDANCE WITH THE MANUFACTURER. INSTALL THESE SECTIONS OF PIPING FREE OF ELBOWS, TEES, AND REDUCERS.

PETERSON ENGINEERING INC.
(PROF. ENG. #: 3600)
75 SOUTH "F" STREET
PENSACOLA, FLORIDA 32502
(850) 434-0513
PEI JOB #2018042

FREDERICK CHARLES BRADLEY LICENSE No.38898 STATE OF FLORIDA PROFESSIONAL ENGINEER
7/22/20

REV #	DATE	DESCRIPTION

INSTALL FIRE SUPPRESSION, BUILDING 90029

FIRE PROTECTION/FOAM RISER LINE DIAGRAM

AIR FORCE SPECIAL OPERATIONS COMMAND
1 SPECIAL OPERATIONS CIVIL ENGINEER SQUADRON
HURLBURT FIELD, FLORIDA

DATE: 22 JULY 2020
DESIGNED BY: F.C. BRADLEY
DRAWN BY: E. KIMMIG
BUILDING NUMBER: 90029
PROJECT NUMBER: CP1026753
SHEET REFERENCE: F-601
SHEET NUMBER: 17 OF 35

D:\PROJECT\2018\18042 Repair Fire Suppression Hangar 90029\DWG\Fire\18042F-601.dwg, 9/29/2020 10:33:32 AM

EXISTING AUTOMATIC SPRINKLER REPLACEMENT SCHEDULE

QTY	ROOM NO.	AREA NAME	OCCUPANCY HAZARD	SPRINKLER DATA			
				STYLE	FINISH	TEMP. RATING °F	ORIFICE SIZE
19	102	MAINTENANCE SUPPORT	ORDINARY	UPR	BRASS	165°	1/2 " ϕ
1	103	SUPPORT FLIGHT CHIEF	ORDINARY	PEND	CP	165°	1/2 " ϕ
6	104	TRAINING CLASSROOM	ORDINARY	PEND	CP	165°	1/2 " ϕ
4	105	WOMEN'S LATRINE	ORDINARY	PEND	CP	165°	1/2 " ϕ
6	106	MEN'S LATRINE	ORDINARY	PEND	CP	165°	1/2 " ϕ
11	107	ENTRY FOYER	ORDINARY	PEND	CP	165°	1/2 " ϕ
4	108	MECHANICAL ROOM	ORDINARY	UPR	BRASS	165°	1/2 " ϕ
0	109	ELEVATOR EQUIP.	ORDINARY	UPR	BRASS	165°	1/2 " ϕ
4	110	STAIR NO. 1	ORDINARY	2 SW 2 PEND	CP	165°	1/2 " ϕ
3	111	STAIR NO. 2	ORDINARY	PEND	CP	165°	1/2 " ϕ
0	112	TELE/COMM.	ORDINARY	UPR	BRASS	165°	1/2 " ϕ
2	113	INSPECTION OFFICE	ORDINARY	PEND	CP	165°	1/2 " ϕ
3	114	ELECTRICAL ROOM	ORDINARY	UPR	BRASS	165°	1/2 " ϕ
5	115	MECHANICAL ROOM	ORDINARY	UPR	BRASS	165°	1/2 " ϕ
2	116	FOAM RISER ROOM	ORDINARY	UPR	BRASS	165°	1/2 " ϕ
11	117	MOBILITY EQUIP.	ORDINARY	UPR	BRASS	165°	1/2 " ϕ
2	118	HAZARDOUS STORAGE	ORDINARY	UPR	BRASS	165°	1/2 " ϕ
8	119	SUPPLY/KITCHEN OFFICE	ORDINARY	PEND	CP	165°	1/2 " ϕ
2	120	LEARNING CENTER	ORDINARY	PEND	CP	165°	1/2 " ϕ
3	121	TRAINING OFFICE	ORDINARY	PEND	CP	165°	1/2 " ϕ
2	122	COMPRESSOR ROOM	ORDINARY	UPR	BRASS	165°	1/2 " ϕ
3	123	ELECTRICAL ROOM	ORDINARY	UPR	BRASS	165°	1/2 " ϕ
4	124	STORAGE #2 ROOM	ORDINARY	UPR	BRASS	165°	1/2 " ϕ
1	126	JANITOR'S CLOSET	ORDINARY	PEND	CP	165°	1/2 " ϕ
4	201	CORRIDOR	ORDINARY	PEND	CP	165°	1/2 " ϕ
2	202	TECH. ADMIN.	ORDINARY	PEND	CP	165°	1/2 " ϕ
3	203	MX OFFICER	ORDINARY	PEND	CP	165°	1/2 " ϕ
1	204	MX CHIEF	ORDINARY	PEND	CP	165°	1/2 " ϕ
3	205	CONFERENCE ROOM	ORDINARY	PEND	CP	165°	1/2 " ϕ
3	206	SMOCC OFFICE	ORDINARY	PEND	CP	165°	1/2 " ϕ
2	207	DEBRIEFING ROOM	ORDINARY	PEND	CP	165°	1/2 " ϕ
6	208	CREW CHIEF SECTION	ORDINARY	PEND	CP	165°	1/2 " ϕ
2	209	CREW CHIEF/FLGHT CHIEF	ORDINARY	PEND	CP	165°	1/2 " ϕ
2	210	CREW CHIEF/FLGHT CHIEF	ORDINARY	PEND	CP	165°	1/2 " ϕ
2	211	SPECIALIST/FLIGHT CHIEF	ORDINARY	PEND	CP	165°	1/2 " ϕ
2	212	SPECIALIST/FLIGHT CHIEF	ORDINARY	PEND	CP	165°	1/2 " ϕ
4	213	SORTIE GENERATION	ORDINARY	PEND	CP	165°	1/2 " ϕ
3	214	AMU PRODUCTION OFFICE	ORDINARY	PEND	CP	165°	1/2 " ϕ
22	215	READY ROOM	ORDINARY	PEND	CP	165°	1/2 " ϕ
1	218	WOMEN'S TOILET	ORDINARY	PEND	CP	165°	1/2 " ϕ
1	219	MEN'S TOILET	ORDINARY	PEND	CP	165°	1/2 " ϕ
6	301	MECHANICAL MEZZANINE	ORDINARY	UPR	BRASS	165°	1/2 " ϕ

NOTES
- CONTRACTOR SHALL VERIFY ALL SPRINKLER QUANTITIES LISTED.
- GUARDS AND/OR SHIELDS ON EXISTING SPRINKLERS IN MECHANICAL SPACES SHALL BE REPLACED.
- CP = CHROME PLATED
- UPR = UPRIGHT SPRINKLER
- PEND = PENDANT SPRINKLER SW = SIDEWALL SPRINKLER

HANGAR SPRINKLER DESIGN CRITERIA

CLASSIFICATION	MAX. PROTECTION AREA PER HEAD	MAX. HEAD SPACING	DESIGN DENSITY GPM/SQ. FT.	DESIGN AREA SQ. FT.	OUTSIDE HOSE ALLOWANCE	REMARKS
SPECIAL HAZARD AIRCRAFT HANGAR a. WET OVERHEAD	100 SF EXISTING	15'	0.2	5000	500 GPM	EXISTING WET PIPE SYSTEM
b. LOW LEVEL HIGH EXPANSION FOAM	SEE NOTE BELOW	N/A	3.28' IN 4 MIN.	COVERAGE TO INCLUDE ENTIRE HANGAR AREA	500 GPM	

NOTE: PER UFC 4-211-01, 13 APRIL 2017, LOW LEVEL HIGH EXPANSION FOAM SYSTEMS MUST COVER 90 PERCENT OF THE AIRCRAFT SILHOUETTE AREA PROJECTED ON THE FLOOR IN ONE MINUTE OR LESS. THE AREA UNDER THE ENGINES EXTENDING BEYOND THE WING EDGE AND UNDER THE TAIL PLANE DOES NOT HAVE TO BE CONSIDERED IN THE AIRCRAFT'S SILHOUETTE AREA.

NOTE: THE CLAMSHELL AREA OF THE HANGAR SHALL BE PROVIDED SPRINKLER COVERAGE USING EXTENDED COVERAGE ORDINARY HAZARD SIDEWALL SPRINKLERS. THE SPRINKLERS SHALL BE STANDARD RESPONSE AND SHALL HAVE A K-FACTOR OF 11.2 AND A TEMPERATURE RATING OF 200°F. THE STANDARD COVERAGE AREA PER SPRINKLER SHALL BE A MINIMUM OF 16FT X 20FT. THE SPRINKLERS SHALL BE DRY BARREL TYPE TO PREVENT FREEZING. SPRINKLERS SHALL BE PROVIDED WITH CORROSION RESISTANT COATING.

NEW FIRE PUMP SCHEDULE-90036

MARK	SERVICE	TYPE	SIZE	PERFORMANCE DATA			ELECTRICAL DATA				NOTES
				CAPACITY GPM	HEAD PSI	MAXIMUM SPEED - RPM	MAXIMUM MOTOR - H.P.	VOLTS	PHASE	HERTZ	
FP-1	FIRE WATER	HSC	8X6	1,250	123	1780	150	460	3	60	1
FP-2	FIRE WATER	HSC	8X6	1,250	123	1780	150	460	3	60	1
FP-3	FIRE WATER	HSC	8X6	1,250	123	1780	150	460	3	60	1
FJP-1	JOCKEY PUMP	IL	-	10	145	3450	2	460	3	60	1

HSC - HORIZONTAL SPLIT CASE
IL - IN-LINE

NOTES:
1. THE FIRE PUMPS IN FIRE PUMP BUILDING 90036 ARE TO BE STARTED AUTOMATICALLY UPON A DROP IN PRESSURE IN ACCORDANCE WITH NFPA 20 AND UFC 4-211-01.
2. THE PUMP SHALL BE SELECTED SUCH THAT THE DOWNSTREAM PRESSURE AT PUMP CHURN DOES NOT EXCEED 150 PSI WHEN THE WATER STORAGE TANKS ARE FULL..

PETERSON ENGINEERING INC.
(PROF. ENG. #: 3600)
75 SOUTH "F" STREET
PENSACOLA, FLORIDA 32502
(850) 434-0513
PEI JOB #2018042

FREDERICK CHARLES BRADLEY LICENSE No.36898 STATE OF FLORIDA PROFESSIONAL ENGINEER 7/20/20

REV #	DATE	DESCRIPTION

INSTALL FIRE SUPPRESSION, BUILDING 90029

FIRE PROTECTION SCHEDULES

AIR FORCE SPECIAL OPERATIONS COMMAND
1 SPECIAL OPERATIONS CIVIL ENGINEER SQUADRON
HURLBURT FIELD, FLORIDA

DATE: 22 JULY 2020
DESIGNED BY: F.C. BRADLEY
DRAWN BY: E. KIMMIG
BUILDING NUMBER: 90029
PROJECT NUMBER: CP1026753
SHEET REFERENCE: **F-602**
SHEET NUMBER: 18 OF 35

D:\PROJECT\2018\18042 Repair Fire Suppression Hangar 90029\DWG\Fire\18042F-602.dwg, 9/29/2020 10:33:34 AM

AIR FORCE RSFACU FUNCTIONAL MATRIX

	ANNUNCIATION AT LOCAL PANEL			NOTIFICATION							AUXILIARY FUNCTIONS				
	AUDIO –VISUAL ALARM INDICATION	AUDIO–VISUAL TROUBLE INDICATION	AUDIO–VISUAL SUPERVISORY INDICATION	GENERAL FIRE ALARM SIGNAL TO FACU AND RECEIVING STATION	FOAM/WATER RELEASE SIGNAL TO FACU AND RECEIVING STATION	COMMON FOAM/WATER TROUBLE SIGNAL TO FACU AND RECEIVING STATION	COMMON FIRE ALARM SUPERVISORY SIGNAL TO FACU AND RECEIVING STATION	COMMON FOAM/WATER SUPERVISORY SIGNAL TO FACU AND RECEIVING STATION	OPTICAL FLAME DETECTION INHIBITED SUPERVISORY SIGNAL TO FACU AND RECEIVING STATION	ENABLE BLUE BEACONS IN HANGAR BAY	OPEN FLOW CONTROL VALVE FOR FOAM/WATER SYSTEM	CLOSE FLOW CONTROL VALVE FOR FOAM/WATER SYSTEM	RE–OPEN FLOW CONTROL VALVE FOR FOAM/WATER SYSTEM IF STILL IN ALARM	DISABLE THE ALARM AND RELEASING FUNCTIONS OF THE OPTICAL FLAME DETECTOR	
ALARM CONDITIONS															
MANUAL FOAM RELEASING STATION	X				X					X	X				
ONE OPTICAL FLAME DETECTOR WITHIN THE PROJECTED ZONE	X			X						X					
TWO SIMULTANEOUS OPTICAL FLAME DETECTORS WITHIN THE PROTECTED ZONE	X				X					X	X				
PRESSURE SWITCH ON FOAM/WATER RISER*	X				X					X					
TROUBLE CONDITIONS															
COMMON TROUBLE		X				X									
SUPERVISORY CONDITIONS															
COMMON SUPERVISORY			X					X							
DEPRESS FOAM STOP STATION BUTTON			X					X				X			
RELEASE FOAM STOP STATION BUTTON													X		
FOAM WATER SUPERVISED SOLENOID DISCONNECT			X					X							
OPTICAL FLAME DETECTION INHIBIT SWITCH			X						X					X	
CLAMSHELL OPTICAL FLAME DETECTION DEACTIVATED (DUE TO CLAMSHELL OPEN)			X												

*DO NOT RELEASE THE FLOW CONTROL VALVE FROM THE PRESSURE SWITCH.

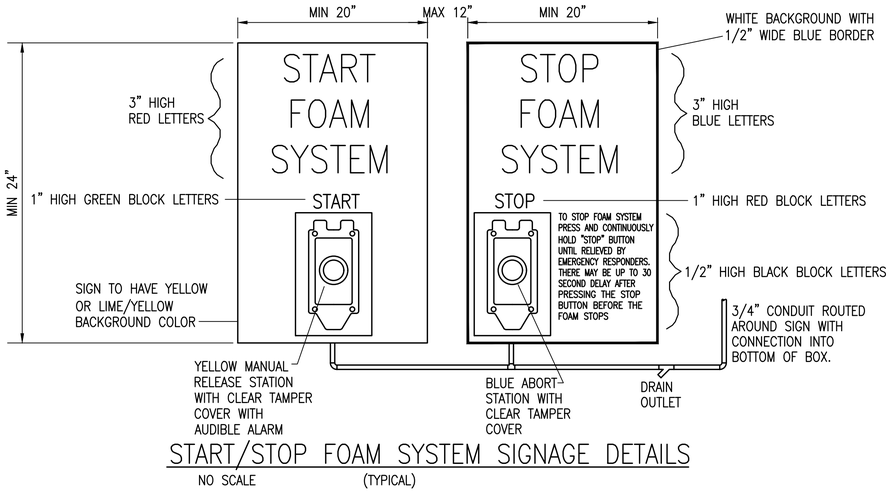

START/STOP FOAM SYSTEM SIGNAGE DETAILS

NO SCALE (TYPICAL)

SEQUENCE OF OPERATION.

THE FOAM SUPPRESSION SYSTEM SHALL BE RELEASED BY ONE OR MORE OF THE FOLLOWING:

1. ACTIVATION OF A MANUAL FOAM START STATION.
2. TWO SIMULTANEOUS VOTES FROM OPTICAL FLAME DETECTORS IN THE SAME ZONE.

FOAM RELEASE SHALL BE INTERRUPTED BY FOAM STOP STATIONS OF THE 'DEADMAN' TYPE. SEE SPECIFICATIONS. THE STOP STATIONS MUST BE USED IN CONJUNCTION WITH VALVES AND EQUIPMENT THAT WILL PROHIBIT OR STOP THE DISCHARGE OF FOAM/WATER FROM THE FOAM SUPPRESSION SYSTEM.

ONCE DEPRESSED, AND SO LONG AS THE BUTTON IS HELD DOWN, THE STOP STATION WILL PREVENT/STOP DISCHARGE FROM THE FOAM SYSTEM REGARDLESS OF WHETHER OR NOT THE FOAM SYSTEM WAS ACTIVATED AUTOMATICALLY OR MANUALLY AND WHETHER OR NOT THE ACTIVATION OCCURS PRIOR TO OR AFTER THE STOP STATION IS PRESSED AND HELD. UNLESS THE RELEASING SERVICE FIRE ALARM CONTROL UNIT (RSFACU) HAS BEEN RESET AND ALL ACTIVATION ALARMS (MANUAL AND AUTOMATIC) HAVE BEEN CLEARED; WHEN THE FOAM STOP STATION BUTTON IS RELEASED, THE RSFACU WILL RESTORE THE FOAM DISCHARGE. WHEN THE FOAM STOP STATION BUTTON IS DEPRESSED UNDER FULL FLOW, THE TIME TO FULLY CLOSE THE FLOW CONTROL VALVE WILL NOT EXCEED 15 SECONDS. THE TIME FOR THE FLOW CONTROL VALVE TO FULLY OPEN UPON RELEASE OF THE FOAM STOP STATION BUTTON WILL NOT EXCEED 5 SECONDS.

START/STOP STATION INSTALLATION REQUIREMENT

START STATIONS AND FLAME DETECTORS REQUIRE CONDUIT TO ENTER THE BOTTOM OF THE BACK BOX, AND THE LOW POINT OF THE CONDUIT IS IN A HAZARDOUSLY CLASSIFIED AREA, ADDITIONALLY PROVIDE BREATHERS IN ISOLATED PORTIONS OF THE CONDUIT (E.G. SEALED OFF FROM THE REMAINING CONDUIT SYSTEM). DRAINS AND BREATHERS SHALL BE RATED FOR THE HAZARDOUS CLASSIFICATION IN WHICH THEY ARE INSTALLED, BUT SHALL NOT BE LESS THAN NEMA 4.

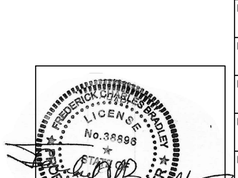

PETERSON ENGINEERING INC.
(PROF. ENG. #: 3600)
75 SOUTH "F" STREET
PENSACOLA, FLORIDA 32502
(850) 434–0513
PEI JOB #2018042

REV #	DATE	DESCRIPTION

INSTALL FIRE SUPPRESSION, BUILDING 90029

FIRE SUPPRESSION CONTROLS-1

AIR FORCE SPECIAL OPERATIONS COMMAND
1 SPECIAL OPERATIONS CIVIL ENGINEER SQUADRON
HURLBURT FIELD, FLORIDA

DATE: 22 JULY 2020
DESIGNED BY: F.C. BRADLEY
DRAWN BY: E. KIMMIG
BUILDING NUMBER: 90029
PROJECT NUMBER: CP1026753
SHEET REFERENCE: F-603
SHEET NUMBER: 19 OF 35

D:\PROJECT\2018\18042 Repair Fire Suppression Hangar 90029\DWG\Fire\18042F-603.dwg, 9/29/2020 10:33:37 AM

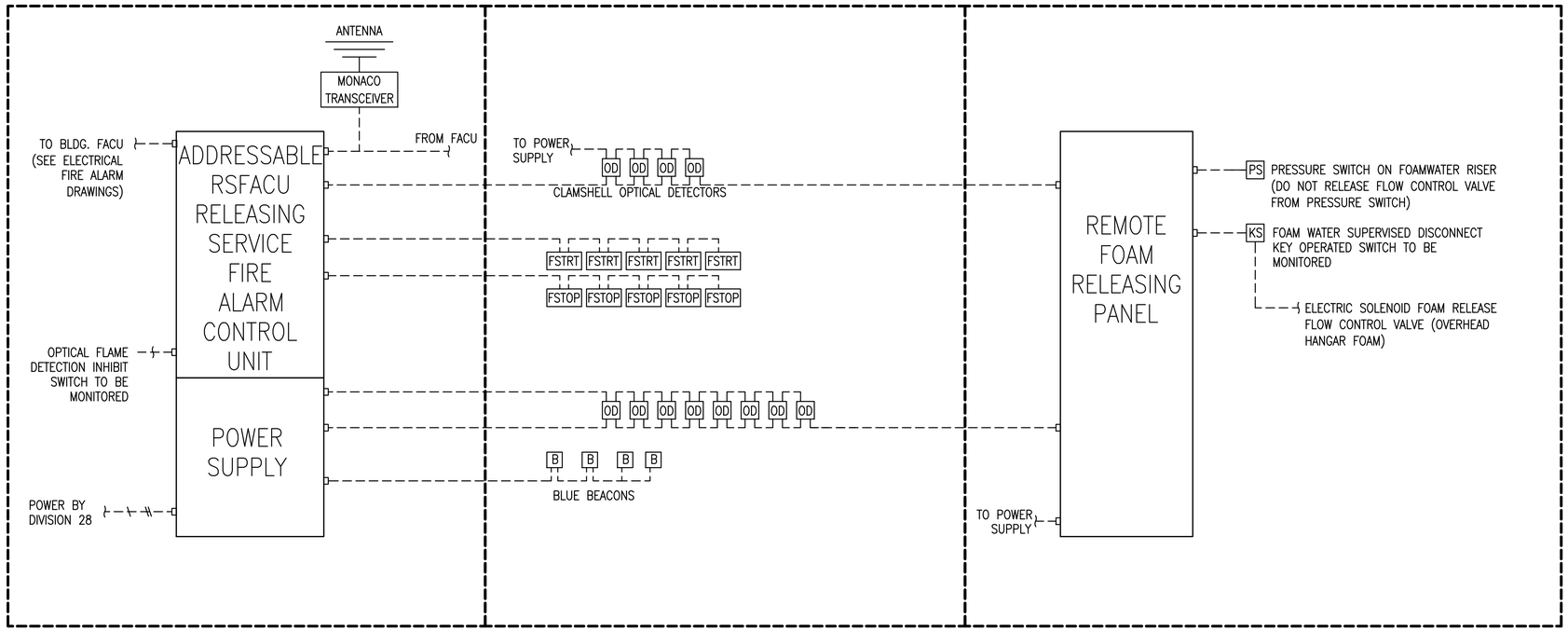

LEGEND AND ABBREVIATIONS

RSFACU	RELEASING SERVICE FIRE ALARM CONTROL UNIT
RFRP	REMOTE FOAM RELEASING PANEL
FACU	FIRE ALARM CONTROL UNIT
B	BLUE BEACONS IN HANGAR BAY
FSTRT	FOAM START STATION
FSTOP	FOAM STOP STATION
KS	KEY SWITCH
OD	OPTICAL FLAME DETECTORS
PS	PRESSURE SWITCH

NOTE:
THE FOAM SYSTEM SHALL HAVE A REMOTE RELEASING PANEL (DET-TRONICS ENHANCED DISCRETE I/O MODULE (EDIO)) DUE TO DISTANCE GREATER THAN 100 FEET BETWEEN RSFACU AND END DEVICES.

REV #	DATE	DESCRIPTION

INSTALL FIRE SUPPRESSION, BUILDING 90029

FIRE SUPPRESSION CONTROLS-2

AIR FORCE SPECIAL OPERATIONS COMMAND
1 SPECIAL OPERATIONS CIVIL ENGINEER SQUADRON
HURLBURT FIELD, FLORIDA

DATE: 22 JULY 2020
DESIGNED BY: F.C. BRADLEY
DRAWN BY: E. KIMMIG
BUILDING NUMBER: 90029
PROJECT NUMBER: CP1026753
SHEET REFERENCE: F-604
SHEET NUMBER: 20 OF 35

FREDERICK CHARLES BRADLEY LICENSE No.38898 STATE OF FLORIDA PROFESSIONAL ENGINEER 7/20/20

PETERSON ENGINEERING INC.
(PROF. ENG. #: 3600)
75 SOUTH "F" STREET
PENSACOLA, FLORIDA 32502
(850) 434-0513
PEI JOB #2018042

D:\PROJECT\2018\18042 Repair Fire Suppression Hangar 90029\DWG\Fire\18042F-604.dwg, 9/29/2020 10:33:39 AM

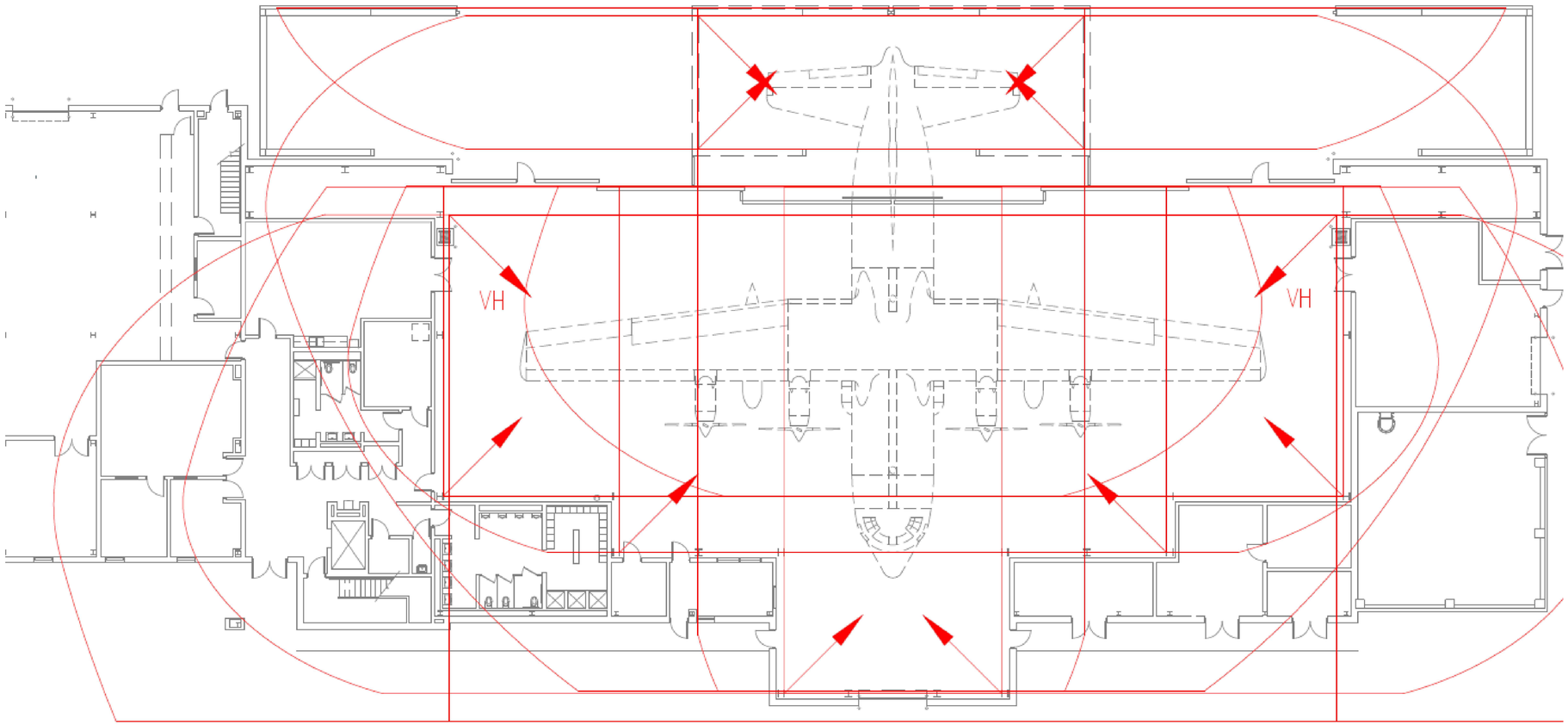

BLDG 90029 FIRE PROTECTION PLAN – OPTICAL DETECTION
NOT TO SCALE

OPTICAL DETECTION NOTES:

1. THIS DRAWING IS INTENDED AS BASIS OF DESIGN. FINAL DESIGN SHALL BE INCORPORATED INTO FIRE PROTECTION SHOP DRAWINGS FURNISHED BY CONTRACTOR.
2. MOUNT FLAME DETECTORS AT THE LOCATIONS SHOWN @ 10' 2' A.F.F. USING Q9033 SWIVEL MOUNT AND MOUNT FLAME DETECTORS AT THE LOCATIONS SHOWN @ 10'±2' A.F.F. USING Q9033 SWIVEL MOUNT AND COLLAR ATTACHMENT. INSTALL 10° FIELD OF VIEW LIMITERS ON ALL DETECTORS.
3. USE DET–TRONICS Q1201C LASER AIMER & HOLDER FOR DETECTOR AIMING. VERIFY THE LASER IS ZEROED USE DET–TRONICS Q1201C LASER AIMER & HOLDER FOR DETECTOR AIMING. VERIFY THE LASER IS ZEROED WITH THE HOLDER ON THE CENTRAL AXIS PRIOR TO AIMING.
4. THE FIELD OF VIEWS (FOV) SHOWN ARE FOR AN X3301 TO A 2'x2' JP–5 PAN FIRE. DETECTORS DENOTED THE FIELD OF VIEWS (FOV) SHOWN ARE FOR AN X3301 TO A 2'x2' JP–5 PAN FIRE. DETECTORS DENOTED WITH 'VH' ARE SET TO VERY HIGH SENSITIVITY. ALL OTHER DETECTORS ARE SET TO MEDIUM SENSITIVITY.
5. THE EXISTING CLAMSHELL POWER CABLE FESTOON SYSTEM SHALL BE USED TO ROUTE WIRING TO OPTICAL DETECTORS IN THE CLAMSHELL..
6. PROVIDE AND INSTALL A DOOR SWITCH TO DEACTIVATE THE OPTICAL DETECTORS IN THE CLAMSHELL WHEN THE CLAMSHELL DOORS ARE OPEN.
7. PER UFC 4–211–01, ANGLE DETECTORS AND PROVIDE BLINDS (FIELD OF VIEW INHIBITORS) SO THE CONE–OF–VISION IS CONTAINED WITHIN ITS DESIGNATED SUPPRESSION ZONE AND DOES NOT EXTEND MORE THAN 5 FT. OUTSIDE THE HANGAR BAY, INTO ANOTHER FIRE AREA SUCH AS THROUGH A NORMALLY OPEN ROLL–UP FIRE DOOR, OR IS WITHIN THE VIEW OF HOT SOURCES SUCH AS RADIANT HEATERS.

REV #	DATE	DESCRIPTION

INSTALL FIRE SUPPRESSION, BUILDING 90029

FIRE PROTECTION PLAN–OPTICAL DETECTION

AIR FORCE SPECIAL OPERATIONS COMMAND

1 SPECIAL OPERATIONS CIVIL ENGINEER SQUADRON
HURLBURT FIELD, FLORIDA

DATE: 22 JULY 2020
DESIGNED BY: F.C. BRADLEY
DRAWN BY: E. KIMMIG
BUILDING NUMBER: 90029
PROJECT NUMBER: CP1026753
SHEET REFERENCE: F–701
SHEET NUMBER: 21 OF 35

FREDERICK CHARLES BRADLEY LICENSE No.36898 STATE OF FLORIDA PROFESSIONAL ENGINEER
7/20/20

PETERSON ENGINEERING INC.
(PROF. ENG. #: 3600)
75 SOUTH "F" STREET
PENSACOLA, FLORIDA 32502
(850) 434–0513
PEI JOB #2018042

D:\PROJECT\2018\18042 Repair Fire Suppression Hangar 90029\DWG\Fire\18042F-701.dwg, 9/29/2020 10:33:41 AM

FIRE ALARM LEGEND - DEMOLITION:

- FIRE ALARM SYSTEM - SPRINKLER SYSTEM FLOW SWITCH CONNECTION - REMOVE.
- FIRE ALARM SYSTEM - SPRINKLER SYSTEM TAMPER SWITCH CONNECTION - REMOVE.
- FIRE ALARM SYSTEM - SPRINKLER SYSTEM PRESSURE SWITCH CONNECTION - REMOVE.
- FIRE ALARM SYSTEM - SPRINKLER SYSTEM FLOW SWITCH CONNECTION - TO REMAIN.
- FIRE ALARM SYSTEM - SPRINKLER SYSTEM TAMPER SWITCH CONNECTION - TO REMAIN.
- FIRE ALARM SYSTEM - EXISTING MONITORING MODULE - REMOVE.
- FIRE ALARM SYSTEM - EXISTING MONITORING MODULE - TO REMAIN.
- EXISTING FLEXIBLE CONDUIT & WIRING - REMOVE.

ABBREVIATIONS

FP	FIRE PUMP
FPC	FIRE PUMP CONTROLLER
LOC	LOCAL OPERATING CONSOLE
FACP	FIRE ALARM CONTROL PANEL
RSFACU	RELEASING SERVICE FIRE ALARM CONTROL UNIT
CP	CONTROL PANEL
W/	WITH
EF	EXHAUST FAN
AHU	AIR HANDLING UNIT
AFF	ABOVE FINISHED FLOOR
SF	SUPPLY FAN
WF	WALL FAN

FIRE ALARM LEGEND - NEW WORK:

- FACP — FIRE ALARM SYSTEM - EXISTING FIRE ALARM CONTROL PANEL - TO REMAIN.
- TR — FIRE ALARM SYSTEM - EXISTING TRANSCEIVER - TO REMAIN.
- FIRE ALARM SYSTEM - EXISTING MONITOR MODULE - TO REMAIN - RECONNECT, AS NOTED.
- FIRE ALARM SYSTEM - MONITORING MODULE.
- FIRE ALARM SYSTEM - EXISTING FLOW SWITCH CONNECTION - TO REMAIN.
- FIRE ALARM SYSTEM - EXISTING FLOW TAMPER CONNECTION - TO REMAIN.
- FIRE ALARM SYSTEM - FLOW SWITCH CONNECTION.
- FIRE ALARM SYSTEM - TAMPER SWITCH CONNECTION.
- FIRE ALARM SYSTEM - PRESSURE SWITCH CONNECTION.
- F — FIRE ALARM SYSTEM - NEW CIRCUITRY IN CONDUIT - 3/4"C. MINIMUM.
- FIRE ALARM SYSTEM - EXISTING CONDUIT & WIRING - TO REMAIN.
- MNSP — MASS NOTIFICATION SYSTEM - EXISTING CONTROL PANEL - TO REMAIN.
- LOC — MASS NOTIFICATION SYSTEM - EXISTING LOCAL OPERATORS CONSOLE UNIT W/ HVAC EMERGENCY SHUTOFF - TO REMAIN.
- RSFACU — NEW FOAM SYSTEM RELEASING SERVICE FIRE ALARM CONTROL UNIT
- J — EXISTING JUNCTION BOX - TO REMAIN.
- EXISTING FLEXIBLE CONDUIT CONNECTION - TO REMAIN.
- LIQUID TIGHT FLEXIBLE CONDUIT & WIRING CONNECTION.
- R — RELAY

GENERAL FIRE ALARM NOTES:

1. THE ENTIRE INSTALLATION SHALL BE IN ACCORDANCE WITH THE LATEST ACCEPTED EDITIONS OF NFPA 11, NFPA 13, NFPA 20, NFPA 70, NFPA 72, NFPA 101, UFC 3-600-01, UFC 4-010-01, UFC 4-021-01 AND UFC 4-211-01.
2. ALL WORK AND MATERIALS USED IN THIS PROJECT SHALL BE NEW, UNDERWRITERS LABORATORIES (UL) LISTED AND LABELED, AND SHALL BE FURNISHED AND INSTALLED BY THE CONTRACTOR UNLESS NOTED OTHERWISE.
3. CONDUIT ROUTINGS AND DEVICE/EQUIPMENT LOCATIONS SHOWN ARE DIAGRAMMATIC ONLY, CONTRACTOR SHALL FIELD ROUTE AND LOCATE AS REQUIRED. CONDUIT ROUTINGS SHALL BE PARALLEL OR PERPENDICULAR TO BUILDING LINES.
4. THE CONDUIT SYSTEMS UTILIZED SHALL BE AS FOLLOWS:
   A) BELOW GRADE - PVC SCHEDULE 40.
   B) TRANSITIONS FROM BELOW GRADE (WHICH SHALL INCLUDE A "RSC" FACTORY 90 DEGREE ELBOW) TO ABOVE GRADE AND/OR THRU SLAB - RIGID GALVANIZED STEEL (RGS).
   C) INTERIOR OF BUILDING CONDUITS LESS THAN 2" IN DIAMETER (ID) - ELECTRIC METALLIC TUBING (EMT) UNLESS NOTED OTHERWISE.
   D) INTERIOR OF BUILDING CONDUITS 2" IN DIAMETER (ID) OR GREATER - RIGID STEEL CONDUIT (RSC) UNLESS NOTED OTHERWISE.
   E) EXTERIOR OF BUILDING EXPOSED ABOVE FINISHED GRADE - RIGID STEEL CONDUIT (RSC) UNLESS NOTED OTHERWISE.
   F) FINAL 36" OF CONDUIT CONNECTED TO MOTORS AND DRY TYPE TRANSFORMERS - LIQUIDTIGHT FLEXIBLE METAL CONDUIT (LFMC).
5. ALL NEW CONDUITS RUN UNDERGROUND SHALL HAVE A MINIMUM BURIAL DEPTH OF 36" UNLESS NOTED OTHERWISE.
6. NEW CONDUITS LEAVING OR ENTERING BUILDING SHALL BE SEALED PER N.E.C. TO PREVENT ENTRANCE OF MOISTURE.
7. ALL NEW FIRE ALARM AND MASS NOTIFICATION SYSTEM CONDUITS IN FINISHED AND UNFINISHED AREAS SHALL BE "RED" IN COLOR. ALL JUNCTION BOXES SHALL BE LABELED WITH "FIRE ALARM" ON THE INSIDE OF THE COVER.
8. COORDINATE LOCATIONS OF ALL NEW ELECTRICAL EQUIPMENT, DEVICES, OUTLETS, ETC., WITH EXISTING LIGHTING FIXTURES, MECHANICAL DIFFUSERS, PUBLIC ADDRESS SPEAKERS, ETC. PRIOR TO ROUGH-IN WORK.
9. THE CONTRACTOR SHALL FIELD VERIFY ALL EXISTING CONDITIONS PRIOR TO BEGINNING ANY WORK AND SHALL IMMEDIATELY NOTIFY THE GOVERNMENT INSPECTOR OF ANY DISCREPANCIES. FAILURE TO DO SO INDICATES THAT THE CONTRACTOR ACCEPTS THE CONDITIONS AS THEY EXIST AND SHALL PERFORM THE WORK AS SHOWN AND SPECIFIED.
10. WHERE ITEMS ON DEMOLITION DRAWINGS ARE SHOWN TO BE REMOVED, REMOVAL SHALL INCLUDE WIRING AND CONDUIT BACK TO CONTROL PANEL FROM WHICH WIRING AND CONDUIT ORIGINATED. CONDUITS WHICH ARE CONCEALED BELOW FLOORS OR IN WALLS MAY BE ABANDONED IN PLACE. THE CONTRACTOR SHALL REMOVE ALL MATERIALS THAT ARE REQUIRED TO BE REMOVED, FROM THE SITE AND DEPOSED OF IN ACCORDANCE WITH STATE AND FEDERAL REQUIREMENTS.
11. THE EXISTING FOAM RELEASING PANEL WILL BE TURNED OVER TO THE GOVERNMENT. ALL REMOVED FIRE ALARM EQUIPMENT IS TO BE REMOVED FROM THE BASE BY THE CONTRACTOR..
12. ALL NEW OUTLET BOXES FOR NEW FIRE ALARM AND MASS NOTIFICATION DEVICES SHALL BE 4" SQUARE X 1 1/2" DEEP UNLESS NOTED OTHERWISE.
13. ALL NEW FIRE ALARM AND MASS NOTIFICATION SYSTEM CIRCUITS SHALL BE TERMINATED ON TERMINAL STRIPS. WIRE NUTS ARE PROHIBITED. ALL SIGNALING LINE CIRCUITS (SLC) AND NOTIFICATION APPLIANCE CIRCUITS (NAC) ENTERING THE BUILDING AND AT THE FIRE ALARM PANEL SHALL BE PROVIDED WITH SUITABLE SURGE SUPPRESSORS (SEE SPECIFICATIONS)
14. THE CONTRACTOR SHALL NOTIFY THE CONTRACTING OFFICER 30 DAYS BEFORE THE PRELIMINARY AND ACCEPTANCE FIRE ALARM TESTS ARE TO BE CONDUCTED. THE TESTS SHALL BE IN ACCORDANCE WITH THE APPROVED TESTS PROCEDURES IN THE PRESENCE OF THE CONTRACTING OFFICER. THE CONTRACTOR SHALL FURNISH ALL INSTRUMENTS AND PERSONNEL REQUIRED FOR THE TESTS.
15. ANY WORK THAT WILL DISABLE THE FIRE ALARMS WILL HAVE TO BE APPROVED BY THE FACILITY DIRECTOR. IF APPROVED, THE FACILITY DIRECTOR WILL COORDINATE, WITH ASSISTANCE OF FIRE PREVENTION, A FIRE WATCH AND PUT CORRECTIVE MEASURES IN PLACE. THE CONTRACTOR CAN TEAM UP WITH THE DIRECTOR SO THEY COMMUNICATE WITH FRONT DESK AS ADDITIONAL FIRE WATCH.
16. CONDUIT ENTRANCES INTO FIRE PUMP CONTROLLERS SHALL BE IN ACCORDANCE WITH MANUFACTURER'S REQUIREMENTS. ALL CONDUITS SHALL ENTER THE CONTROLLERS INTO THE SIDE OF THE CABINET, AS LOW AS POSSIBLE.

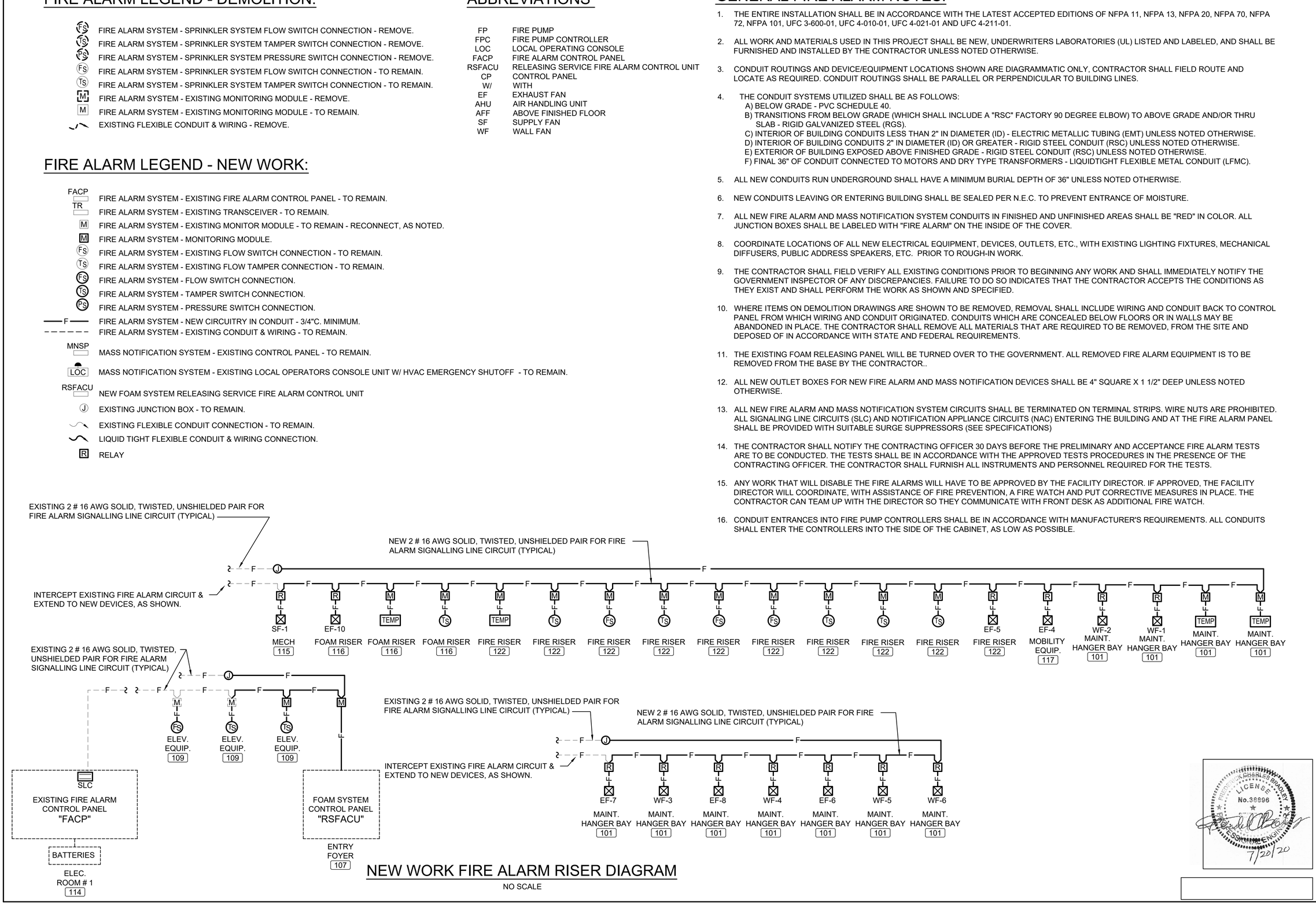

NEW WORK FIRE ALARM RISER DIAGRAM

NO SCALE

REV #	DATE	DESCRIPTION

INSTALL FIRE SUPPRESSION, BUILDING 90029

FIRE ALARM LEGENDS

AIR FORCE SPECIAL OPERATIONS COMMAND
1 SPECIAL OPERATIONS CIVIL ENGINEER SQUADRON
HURLBURT FIELD, FLORIDA

DATE: 22 JULY 2020
DESIGNED BY: FCB
DRAWN BY: JRH
BUILDING NUMBER: 90029
PROJECT NUMBER: CP1026753
SHEET REFERENCE: FA-101
SHEET NUMBER: 22 OF 35

D:\PROJECT\2018\18042 Repair Fire Suppression Hangar 90029\DWG\Elec\18042 FA101 FA LEGENDS.dwg, 7/21/2020 12:24:12 AM, AutoCAD PDF (High Quality Print).pc3

FIRE ALARM / MASS NOTIFICATION SYSTEM FUNCTIONAL MATRIX

		ANNUNCIATION AT LOCAL PANEL			NOTIFICATION															AUXILIARY FUNCTIONS					
		AUDIO VISUAL ALARM INDICATION	AUDIO-VISUAL TROUBLE INDICATION	AUDIO-VISUAL SUPERVISORY INDICATION	FIRE ALARM SIGNAL TO RECEIVING STATION	COMMON FIRE ALARM TROUBLE SIGNAL TO RECEIVING STATION	COMMON MNS TROUBLE SIGNAL TO RECEIVING STATION	COMMON FIRE ALARM SUPERVISORY SIGNAL TO RECEIVING STATION	COMMON FOAM SUPERVISORY SIGNAL TO RECEIVING STATION	FOAM SYSTEM DISABLED SUPERVISORY SIGNAL TO RECEIVING STATION	LOW TEMPERATURE SUPERVISORY SIGNAL TO RECEIVING STATION AND EMCS	INITIATE FIRE ALARM VISUAL NOTIFICATION	INITIATE GENERAL FIRE ALARM AUDIBLE NOTIFICATION	DISABLE GENERAL FIRE ALARM VOICE MESSAGE (IF ENABLED)	INITIATE FOAM RELEASE VOICE MESSAGE	INDIVIDUAL WATERFLOW ALARM PER RISER SIGNAL TO RECEIVING STATION	SUPERVISORY MNS OVERRIDE OF FA SIGNAL TO RECEIVING STATION	EMERGENCY SHUTDOWN OF HVAC SIGNAL TO RECEIVING STATION	SHUT DOWN SUPPLY, RECIRCULATING, EXHAUST & HIGH VOLUME SLOW ROTATING FANS IN HANGAR BAY*	SHUT DOWN ASSOCIATED HVAC UNIT	RECORD EVENT IN FACP HISTORY BUFFER	PLAY MNS MESSAGE ASSOCIATED WITH BUTTON	OVERRIDE FA MESSAGE	EMERGENCY SHUTDOWN OF ALL HVAC EQUIPMENT (SEE SCHEDULE THIS SHEET)
ALARM CONDITIONS	MANUAL PULL STATION	X			X							X	X									X			
	SMOKE DETECTOR	X			X							X	X									X			
	WATERFLOW SWITCHES	●			●							●	●			●						●			
	GENERAL ALARM FROM RSFACU	●										●	●									●			
	FOAM/WATER RELEASE FROM RSFACU	●										●		●	●					●*		●			
TROUBLE CONDITIONS	FACP TROUBLE		X			X																X			
	FACP AC POWER FAILURE		X			X																X			
	FACP SYSTEM LOW BATTERY		X			X																X			
	FACP OPEN CIRCUIT		X			X																X			
	FACP GROUND FAULT		X			X																X			
	REMOTE POWER SUPPLY TROUBLE		X			X																X			
	MNS AC POWER FAILURE		X				X																		
	MNS SYSTEM LOW BATTERY		X				X																		
	MNS OPEN CIRCUIT		X				X																		
	MNS GROUND FAULT		X				X																		
	MNS NOTIFICATION APPLIANCE CIRCUIT SHORT		X				X																		
	RSFACU TROUBLE		●																						
SUPERVISORY CONDITIONS	DUCT SMOKE DETECTOR - SUPERVISORY			X				X													X				
	MNS ACU PTT MICROPHONE ACTIVE - PRIORITY 1			X								X						X					X		
	MNS LIVE VOICE MESSAGE ACTIVE - PRIORITY 2			X								X						X					X		
	MNS LOC MICROPHONE ACTIVE - PRIORITY 3			X								X						X					X		
	MNS DIGITAL MESSAGE 1-3 ACTIVE - PRIORITY 4-6			X								X												X	
	MNS DIGITAL MESSAGE 5-8 ACTIVE			X								X												X	
	MNS LOC HVAC SHUTDOWN SWITCH ACTIVE			X															X						●
	SPRINKLER CONTROL VALVE			●			●															●			
	COMMON FA SUPERVISORY FROM RSFACU			●																		●			
	COMMON FOAM/WATER SUPERVISORY FROM RSFACU			●																		●			
	OPTICAL FLAME DETECTION INHIBITED SUPERVISORY FROM RSFACU			●																		●			
	TEMPERATURE SENSORS IN HANGAR & RISER ROOMS			●							X											●			
	LOW FOAM CONCENTRATE LEVEL			●					X													●			
	FOAM/WATER & CONCENTRATE CONTROL VALVE SUPERVISORY			●						X												●			

X INDICATES EXISTING SETTINGS OF FIRE ALARM/MASS NOTIFICATION SYSTEM

● INDICATES NEW SETTINGS REQUIRED UNDER THIS CONTRACT

●* FIRE ALARM CONTRACTOR SHALL REPROGRAM THE FA CONTROL PANEL TO SHUTDOWN THE WALL FANS (WF-1,2,3,4,5, & 6) AND EXHAUST FANS (EF-6, 7, 8) SERVING THE HANGAR UPON RECEIVING A FOAM/WATER RELEASE ALARM SIGNAL FROM THE RSFACU.

HVAC SHUTDOWN EQUIPMENT SCHEDULE

MARK	LOCATION	MEANS OF SHUTDOWN
AHU-1	MECH 108	EXISTING FIRE ALARM RELAY
AHU-2	MECH 108	EXISTING FIRE ALARM RELAY
EF-1	MEN LATRINE	EXISTING INTERLOCK W/AHU-2
EF-2	MEN SHOWER	EXISTING INTERLOCK W/AHU-2
SF-1	MECH 115	NEW FIRE ALARM RELAY
EF-5	COMP 122	EXISTING FIRE ALARM RELAY
EF-4	MOB EQUIP 117	EXISTING FIRE ALARM RELAY
EF-6	HANGAR BAY	NEW FIRE ALARM RELAY
EF-7	HANGAR BAY	NEW FIRE ALARM RELAY
EF-8	NOSE HANGAR BAY	NEW FIRE ALARM RELAY
EF-9	MEZZANINE	EXISTING INTERLOCK W/AHU-3
AHU-3	MEZZANINE	EXISTING FIRE ALARM RELAY
AHU-4	MEZZANINE	EXISTING FIRE ALARM RELAY
AHU-5	MEZZANINE	EXISTING FIRE ALARM RELAY
EF-10	RISER 116	NEW FIRE ALARM RELAY
EF-11	STOR#2 118	FAN TO REMAIN ON; EXP PROOF STOR.

NOTES:

- FC-1 AND FC-2 AND ALL UNIT HEATERS SHALL NOT BE SHUTDOWN UPON EMERGENCY HVAC STOP SINCE THEY RE-CIRCULATE AIR.
- FIRE ALARM CONTRACTOR SHALL REPROGRAM THE FA CONTROL PANEL TO MODIFY THE HVAC SHUT DOWN SEQUENCE AND PROVIDE SHUT DOWN TO ALL EQUIPMENT LISTED IN THE "HVAC SHUTDOWN EQUIPMENT SCHEDULE" VIA EXISTING RELAYS AND THE NEW RELAYS LOCATED ON THE PLAN.

FREDERICK CHARLES BRADLEY LICENSE No.38896 REGISTERED ENGINEER 7/22/20

REV #	DATE	DESCRIPTION

INSTALL FIRE SUPPRESSION, BUILDING 90029

FIRE ALARM MATRIX

AIR FORCE SPECIAL OPERATIONS COMMAND
1 SPECIAL OPERATIONS CIVIL ENGINEER SQUADRON
HURLBURT FIELD, FLORIDA

DATE: 22 JULY 2020
DESIGNED BY: FCB
DRAWN BY: JRH
BUILDING NUMBER: 90029
PROJECT NUMBER: CP1026753
SHEET REFERENCE: FA-102
SHEET NUMBER: 23 OF 35

D:\PROJECT\2018\18042 Repair Fire Suppression Hangar 90029\DWG\Elec\18042 FA102 MATRIX.dwg, 7/21/2020 12:24:07 AM, AutoCAD PDF (High Quality Print).pc3

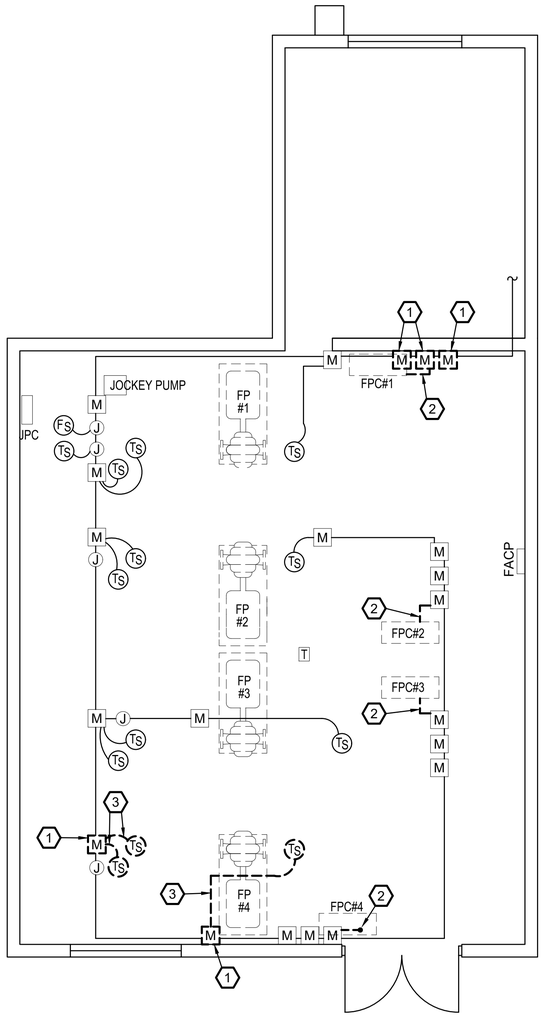

FIRE ALARM PLAN - BUILDING 90036 - DEMOLITION

SCALE: 1/4" = 1'-0"

NORTH

DEMOLITION WORK NOTES:

1. REMOVE EXISTING MONITORING MODULE & INSTALL BLANK COVER ON EXISTING 2-GANG DEVICE BOX.
2. REMOVE EXISTING CONDUIT & WIRING FROM MONITORING MODULE TO FIRE PUMP CONTROLLER.
3. REMOVE EXISTING CONDUIT & WIRING FROM MONITORING MODULE TO TAMPER SWITCH.

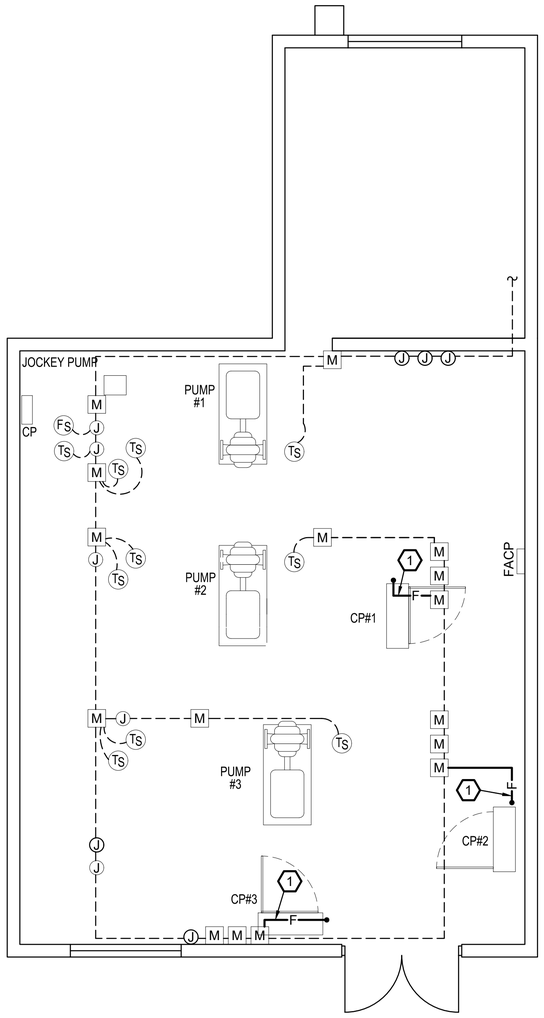

FIRE ALARM PLAN - BUILDING 90036 - NEW WORK

SCALE: 1/4" = 1'-0"

NORTH

NEW WORK NOTES:

1. CONNECT EXISTING MONITORING MODULES FOR PUMP RUN, AC LOSS AND PHASE REVERSAL TO NEW FIRE PUMP CONTROLLER.

GRAPHIC SCALE

1/4" = 1'-0" 4' 0' 4' 8' 12' 16'

FREDERICK CHARLES BRADLEY
LICENSE
No.38896
PROFESSIONAL ENGINEER
7/20/20

REV #	DATE	DESCRIPTION

INSTALL FIRE SUPPRESSION, BUILDING 90029

FIRE ALARM PLANS - BUILDING 90036

AIR FORCE SPECIAL OPERATIONS COMMAND
1 SPECIAL OPERATIONS CIVIL ENGINEER SQUADRON
HURLBURT FIELD, FLORIDA

DATE:	22 JULY 2020
DESIGNED BY:	FCB
DRAWN BY:	JRH
BUILDING NUMBER:	90029
PROJECT NUMBER:	CP1026753
SHEET REFERENCE:	FA-201
SHEET NUMBER:	24 OF 35

D:\PROJECT\2018\18042 Repair Fire Suppression Hangar 90029\DWG\Elec\18042 FA201 90036.dwg, 7/20/2020 4:27:26 PM, AutoCAD PDF (General Documentation).pc3

REMOVE EXISTING HEAT DETECTORS AND ASSOCIATED CONDUIT & WIRING FROM TAIL SECTION CLAMSHELL.

CLASSIFIED ENVIRONMENT NOTE:

IN ACCORDANCE WITH THE NATIONAL ELECTRICAL CODE, ARTICLE 513, THE ENTIRE HANGAR INCLUDING ANY ADJACENT AND COMMUNICATING AREAS NOT SUITABLY CUT OFF FROM THE HANGAR, SHALL BE CLASSIFIED AS CLASS I, DIVISION 2 FROM THE FLOOR LEVEL TO A POINT 18" ABOVE THE FLOOR. THE AREA WITHIN 5'-0" HORIZONTALLY FROM AIRCRAFT POWER PLANTS OR FUEL TANKS, AND FROM THE FLOOR TO 5-0" ABOVE THE UPPER SURFACE OF WINGS AND OF ENGINE ENCLOSURES SHALL BE CLASSIFIED AS CLASS I, DIVISION 2.

KITCHEN 119

NEW SHUTDOWN RELAY FOR WF-6

WOMEN'S LATRINE 105

MECH. 108

INSTALL MONITOR MODULE AT FOAM SYSTEM CONTROL PANEL & CONNECT TO THE FIRE ALARM SIGNAL LINE CIRCUIT.

RSFACU

ELECTRICAL 123

CONNECT NEW MONITOR MODULE TO NEW SPRINKLER SYSTEM TAMPER SWITCH FOR ELEVATOR PIT SPRINKLER.

CONNECT EXISTING MONITOR MODULES TO NEW SPRINKLER SYSTEM FLOW SWITCH AND TAMPER SWITCH FOR ELEVATOR MACHINE ROOM SPRINKLER.

NEW SHUTDOWN RELAY FOR WF-5

NEW SHUTDOWN RELAY FOR EF-6

NEW SHUTDOWN RELAY FOR WF-4

NEW SHUTDOWN RELAY FOR WF-3

NEW SHUTDOWN RELAY FOR EF-7

TEMP

MAINTENANCE HANGER BAY 101

TIE INTO EXISTING FIRE ALARM SIGNAL LINE CIRCUIT. SEE "NEW WORK FIRE ALARM RISER DIAGRAM," SHEET FA-101.

FAA

ENTRY FOYER 107

LOC

STAIR NO. 1 110

ELEV. EQUIP. 109

JAN. CLOSET 108

MEN'S LATRINE 106

TELE/ COMM 112

INSPECTION OFFICE 113

NOTE: POWER DISCONNECTS FOR EXHAUST FANS 6, 7, AND 8 ARE LOCATED APPROXIMATELY 20FT AFF.

MNSP FACP

ELEC. ROOM # 1 114

NEW SHUTDOWN RELAY FOR EF-8

EXISTING LOC W/ EMERGENCY SHUTDOWN SWITCH FOR HVAC EQUIPMENT.

EXISTING FIRE ALARM ANNUNCIATOR

STOR. # 2 118

LOC

EXISTING LOC W/ EMERGENCY SHUTDOWN SWITCH FOR HVAC EQUIPMENT.

NEW SHUTDOWN RELAY FOR WF-1

MOBILITY EQUIPMENT 117

NEW SHUTDOWN RELAY FOR EF-4

NEW SHUTDOWN RELAY FOR WF-2

FIRE RISER 122

MECH. 115

FOAM RISER 116

EQUIPMENT YARD 125

SEE "LARGE SCALE PLANS - RISER ROOMS," SHEET FA-203, FOR DEMOLITION & NEW WORK IN THESE ROOMS.

FIRE ALARM PLAN - HANGAR 90029 - FIRST FLOOR

SCALE: 1/8" = 1'-0"

NORTH

FIRE ALARM TRANSCEIVER NOTE:

THE FIRE ALARM CONTRACTOR SHALL INSTALL (1) 4 ZONE EXPANSION CARD & (1) 8 ZONE EXPANSION BOARD W/ (1) 4 ZONE CARD IN THE EXISTING MONACO BTX-M FIRE ALARM TRANSCEIVER. THE NEW TEMPERATURE SENSORS IN THE HANGAR SHALL TRANSMIT A SUPERVISORY CONDITION TO THE CENTRAL RECEIVING STATION OVER 1 ZONE IN THE EXPANSION CARD. THE FOAM SYSTEM CONTROL PANEL SHALL BE CONNECTED TO THE EXISTING FIRE ALARM TRANSCEIVER TO TRANSMIT ALARM/SUPERVISORY CONDITIONS OVER 3 ADDITIONAL ZONES.

MASS NOTIFICATION NOTE:

AN ADDITIONAL ANNOUNCEMENT SHALL BE PROGRAMMED INTO THE EXISTING MASS NOTIFICATION SYSTEM PANEL. THE MESSAGE SHALL BE IN ACCORDANCE W/ UFC 4-211-01, AND SHALL BE "MAY I HAVE YOUR ATTENTION. THERE IS A FIRE EMERGENCY IN THE HANGAR BAY. PLEASE LEAVE THE BUILDING BY THE NEAREST EXIT. DO NOT EXIT THROUGH THE HANGAR BAY."

GRAPHIC SCALE

1/8" = 1'-0" 8' 0' 8' 16' 24' 32'

FREDERICK CHARLES BRADLEY LICENSE No. 38896 PROFESSIONAL ENGINEER 7/20/20

REV #	DATE	DESCRIPTION

INSTALL FIRE SUPPRESSION, BUILDING 90029

FIRE ALARM PLAN - HANGAR 90029 - FIRST FLOOR

AIR FORCE SPECIAL OPERATIONS COMMAND
1 SPECIAL OPERATIONS CIVIL ENGINEER SQUADRON
HURLBURT FIELD, FLORIDA

DATE: 22 JULY 2020
DESIGNED BY: FCB
DRAWN BY: JRH
BUILDING NUMBER: 90029
PROJECT NUMBER: CP1026753
SHEET REFERENCE: FA-202
SHEET NUMBER: 25 OF 35

D:\PROJECT\2018\18042 Repair Fire Suppression Hangar 90029\DWG\Elec\18042 FA202 HANGAR.dwg, 7/21/2020 12:24:11 AM, AutoCAD PDF (High Quality Print).pc3

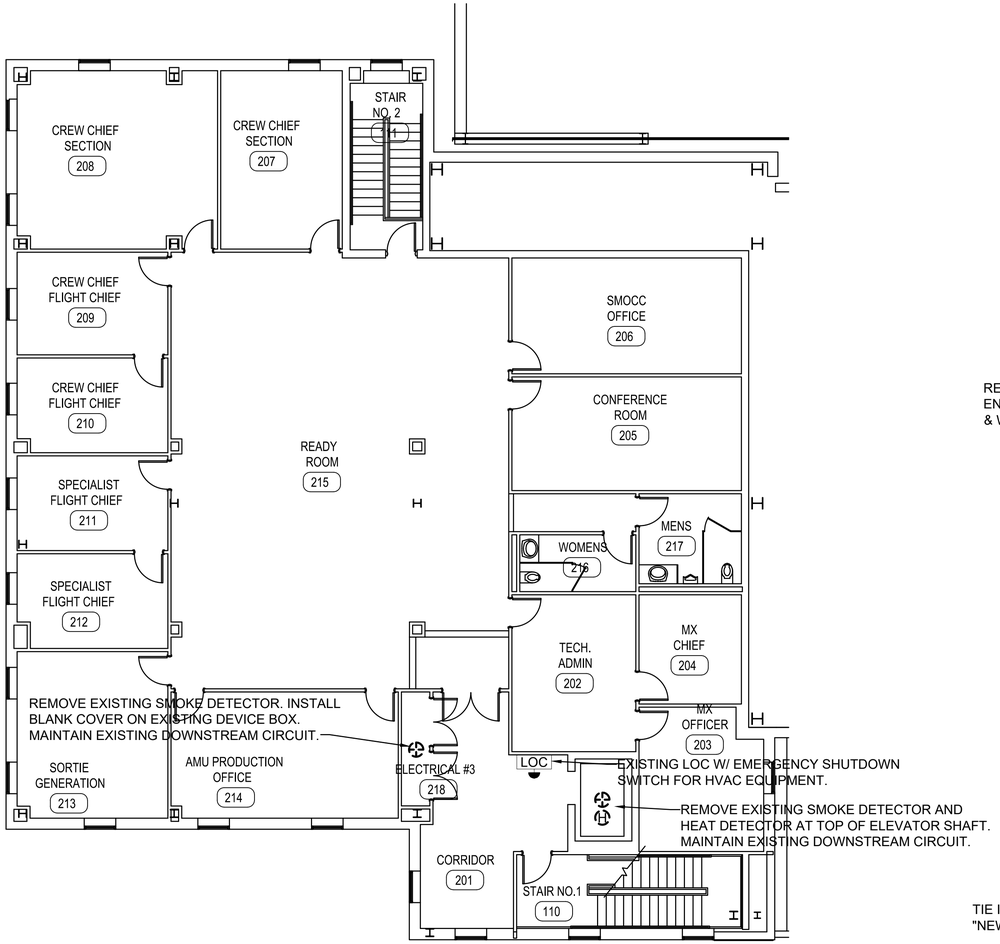

FIRE ALARM PLAN - HANGAR 90029 - SECOND FLOOR

SCALE: 1/8" = 1'-0"

NORTH

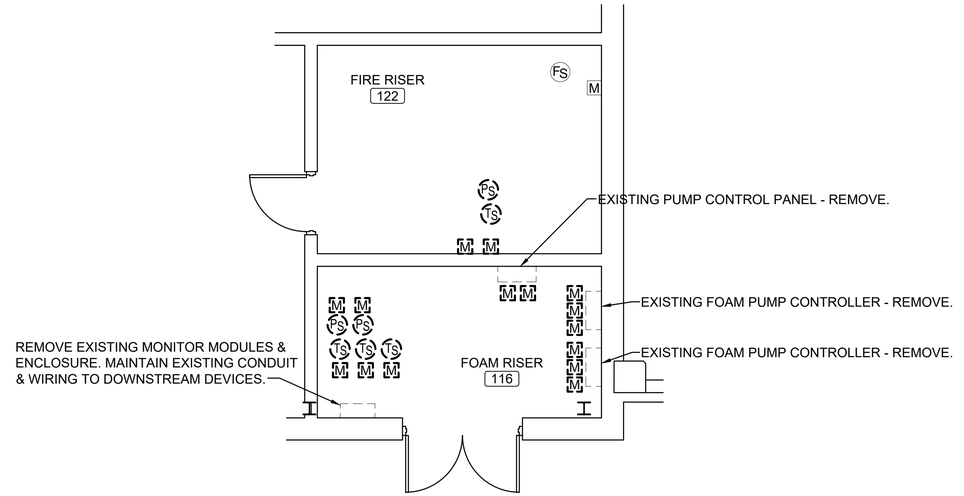

LARGE SCALE PLAN - RISER ROOMS - DEMOLITION

SCALE: 1/4" = 1'-0"

LARGE SCALE PLAN - ELECTRICAL ROOM

SCALE: 1/4" = 1'-0"

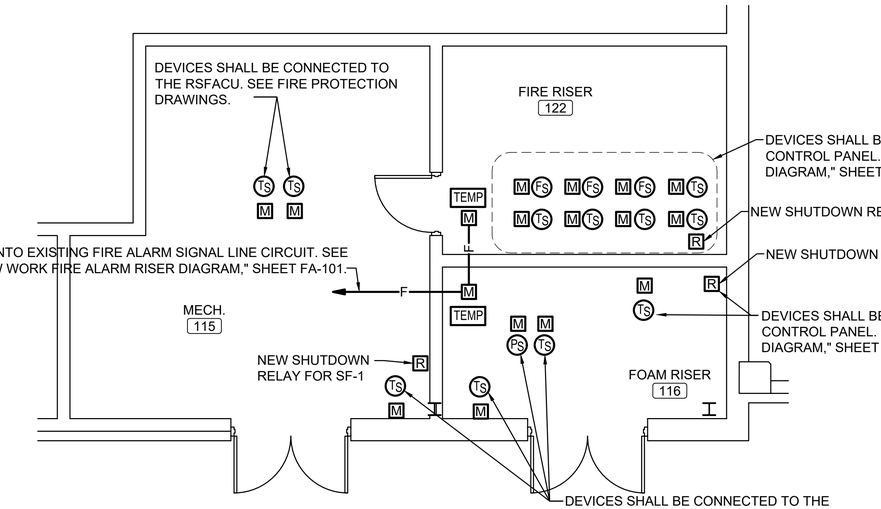

LARGE SCALE PLAN - RISER ROOMS - NEW WORK

SCALE: 1/4" = 1'-0"

GRAPHIC SCALE

1/4" = 1'-0"

4' 0' 4' 8' 12' 16'

FREDERICK CHARLES BRADLEY LICENSE No.38896 STATE OF FLORIDA PROFESSIONAL ENGINEER 7/20/20

REV #	DATE	DESCRIPTION

INSTALL FIRE SUPPRESSION, BUILDING 90029

FIRE ALARM PLAN - HANGAR 90029 - SECOND FLOOR

AIR FORCE SPECIAL OPERATIONS COMMAND
1 SPECIAL OPERATIONS CIVIL ENGINEER SQUADRON
HURLBURT FIELD, FLORIDA

DATE: 22 JULY 2020
DESIGNED BY: FCB
DRAWN BY: JRH
BUILDING NUMBER: 90029
PROJECT NUMBER: CP1026753
SHEET REFERENCE: FA-203
SHEET NUMBER: 26 OF 35

D:\PROJECT\2018\18042 Repair Fire Suppression Hangar 90029\DWG\Elec\18042 FA203 OFFICE AND LSP.dwg, 7/20/2020 4:27:30 PM, AutoCAD PDF (General Documentation).pc3

ELECTRICAL LEGEND - DEMOLITION:

- $ — EXISTING WALL SWITCH - REMOVE.
- (J) — EXISTING JUNCTION BOX - REMOVE.
- (M) — EXISTING MOTOR - REMOVE EXISTING ELECTRICAL CONNECTION.
- (F) — EXISTING EXHAUST FAN - REMOVE EXISTING ELECTRICAL CONNECTION.
- (F) — EXISTING EXHAUST FAN - TO REMAIN.
- ----► — EXISTING CONDUIT & WIRING - REMOVE.
- EXISTING FLEXIBLE CONDUIT & WIRING - REMOVE.
- —E— — EXISTING BRANCH CIRCUIT - TO REMAIN, AS NOTED.
- --EUS-- — EXISTING UNDERGROUND SECONDARY - REMOVE.

ELECTRICAL LEGEND - NEW WORK:

- (BH) — BLUE BEACON LIGHT - FURNISHED BY FIRE SUPPRESSION CONTRACTOR.
- S — WALL SWITCH - QUIET TYPE - 20 A., 120/277 V., 1 POLE - MTD. 48" A.F.F. TO TOP OF BOX.
- DISCONNECT SWITCH - HEAVY DUTY - NON-FUSIBLE.
- MOTOR STARTER - FURNISHED BY MECHANICAL CONTRACTOR - CONNECTION BY ELECTRICAL CONTRACTOR.
- (M) — MOTOR - FURNISHED BY MECHANICAL CONTRACTOR - CONNECTION BY ELECTRICAL CONTRACTOR.
- (J) — EXISTING JUNCTION BOX - TO REMAIN.
- NEW CONDUIT & WIRING - 2 # 12 & 1 # 12 GND. - 1/2" RIGID STEEL CONDUIT, UNLESS NOTED OTHERWISE.
- EXISTING FLEXIBLE CONDUIT CONNECTION - TO REMAIN.
- LIQUID TIGHT FLEXIBLE CONDUIT & WIRING CONNECTION.

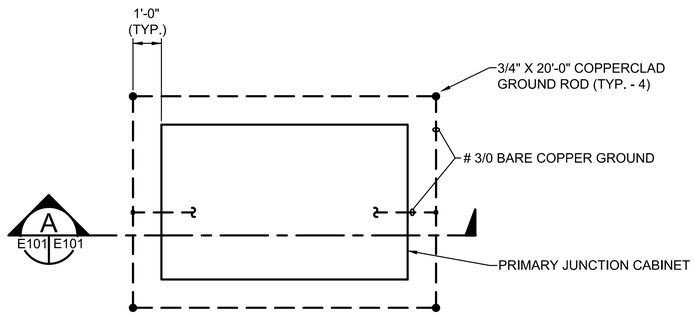

PLAN VIEW
NOT TO SCALE

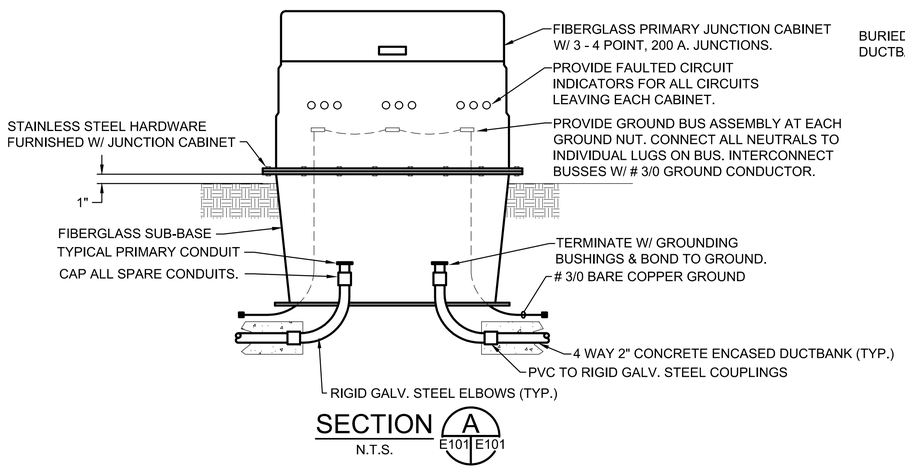

SECTION A
N.T.S.
E101 E101

DIRECT BURIAL PRIMARY JUNCTION CABINET DETAIL

NOTES: ALL GROUND CONNECTIONS SHALL BE IRREVERSIBLE, HIGH COMPRESSION TYPE. PROVIDE RED ADHESIVE SIGN W/ LETTERS "DANGER HIGH VOLTAGE." SIGN SHALL BE 12"W X 9"H. & SHALL BE EQUAL TO BRADY # 84876.

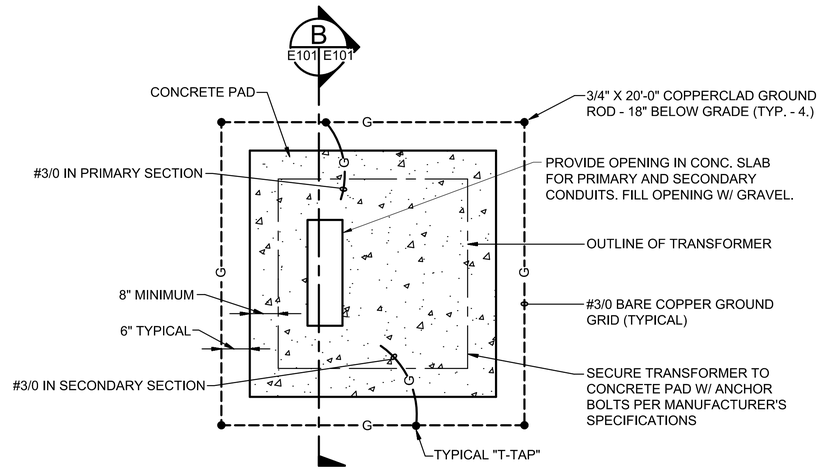

PLAN VIEW
NOT TO SCALE

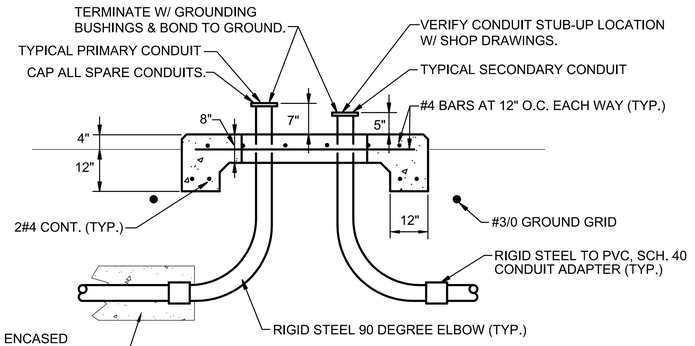

SECTION B
N.T.S.
E101 E101

PAD MOUNT TRANSFORMER DETAILS

NOTES: ALL GROUND CONNECTIONS SHALL BE UL LISTED, IRREVERSIBLE, HIGH COMPRESSION TYPE. PROVIDE ENGRAVED RED BAKELITE SIGN W/ 2 1/2" HIGH LETTERS "DANGER - HIGH VOLTAGE." SIGN SHALL BE 12" W. X 9" HIGH. SECURE TO DOOR OF HOUSING W/ BRASS SCREWS.

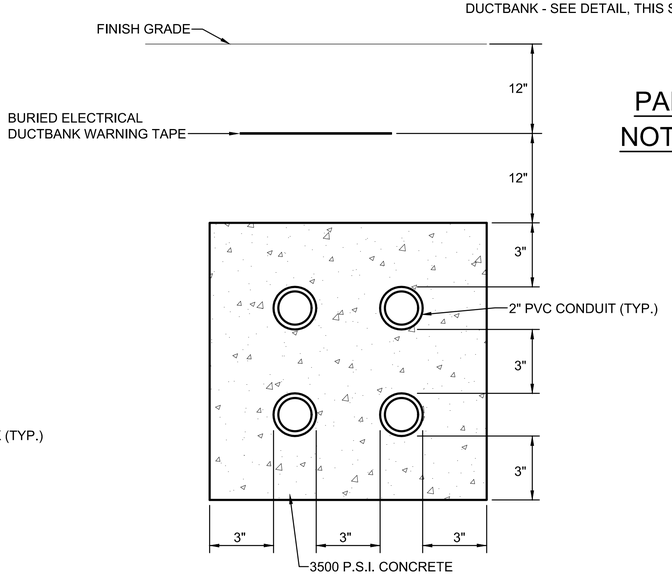

DETAIL - 4 WAY 2" CONCRETE ENCASED DUCTBANK

N.T.S.

REV #	DATE	DESCRIPTION

INSTALL FIRE SUPPRESSION, BUILDING 90029

ELECTRICAL LEGENDS

AIR FORCE SPECIAL OPERATIONS COMMAND
1 SPECIAL OPERATIONS CIVIL ENGINEER SQUADRON
HURLBURT FIELD, FLORIDA

DATE: 22 JULY 2020
DESIGNED BY: EWW/JRH
DRAWN BY: JRH
BUILDING NUMBER: 90029
PROJECT NUMBER: CP1026753
SHEET REFERENCE: E-101
SHEET NUMBER: 27 OF 35

EARL W. WYNN E-19908 PENSACOLA, FLORIDA PROFESSIONAL ENGINEER

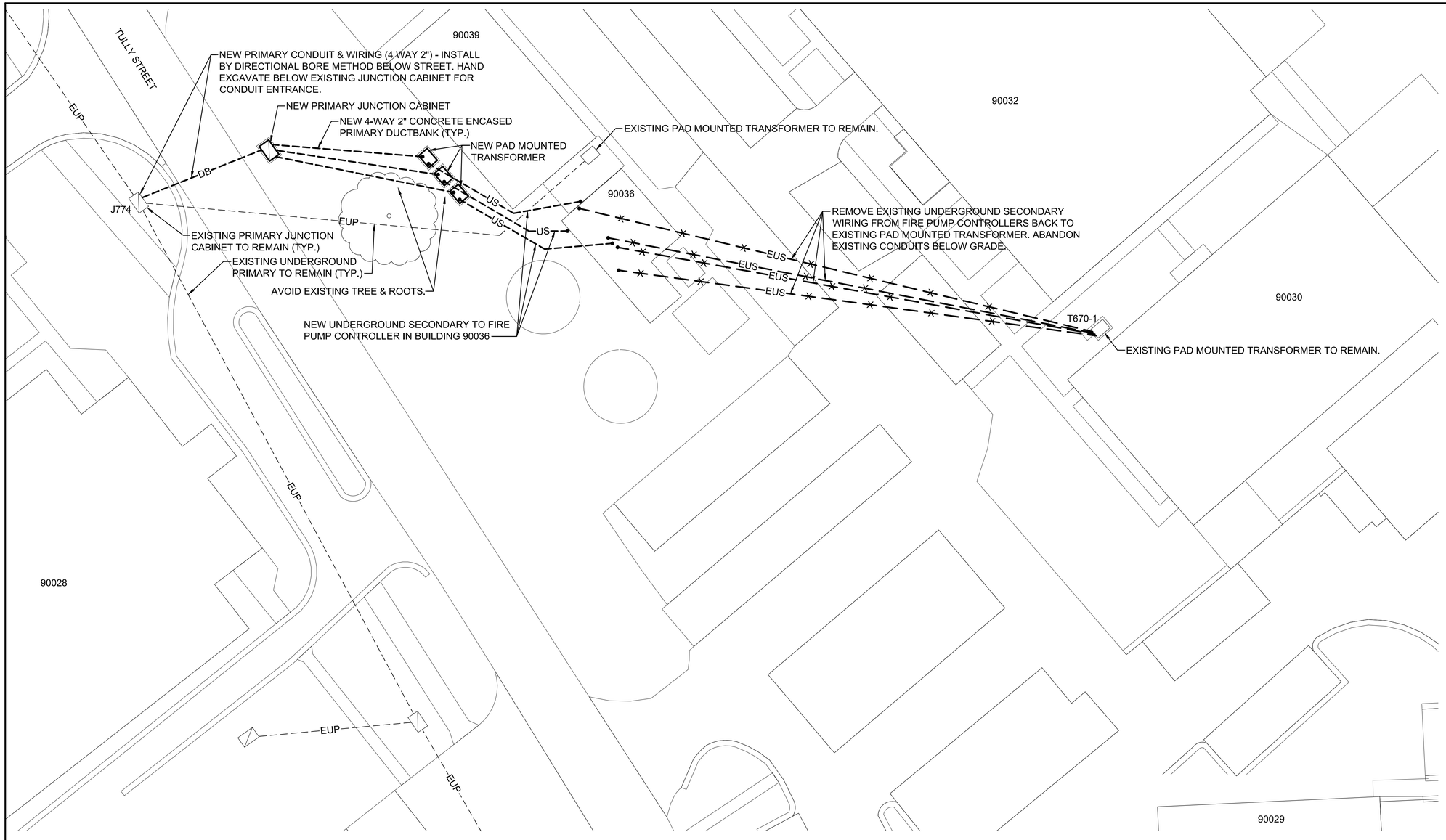

ELECTRICAL SITE PLAN

SCALE: 1" = 20'-0"

NORTH

GRAPHIC SCALE

1" = 20'-0" 20' 0' 20' 40' 60' 80'

EARL W. WYNN E-19908 PENSACOLA FLORIDA PROFESSIONAL ENGINEER

REV #	DATE	DESCRIPTION

INSTALL FIRE SUPPRESSION, BUILDING 90029

ELECTRICAL SITE PLAN

AIR FORCE SPECIAL OPERATIONS COMMAND
1 SPECIAL OPERATIONS CIVIL ENGINEER SQUADRON
HURLBURT FIELD, FLORIDA

DATE: 22 JULY 2020
DESIGNED BY:
DRAWN BY: JRH
BUILDING NUMBER: 90029
PROJECT NUMBER: CP1026753
SHEET REFERENCE: E-201
SHEET NUMBER: 28 OF 35

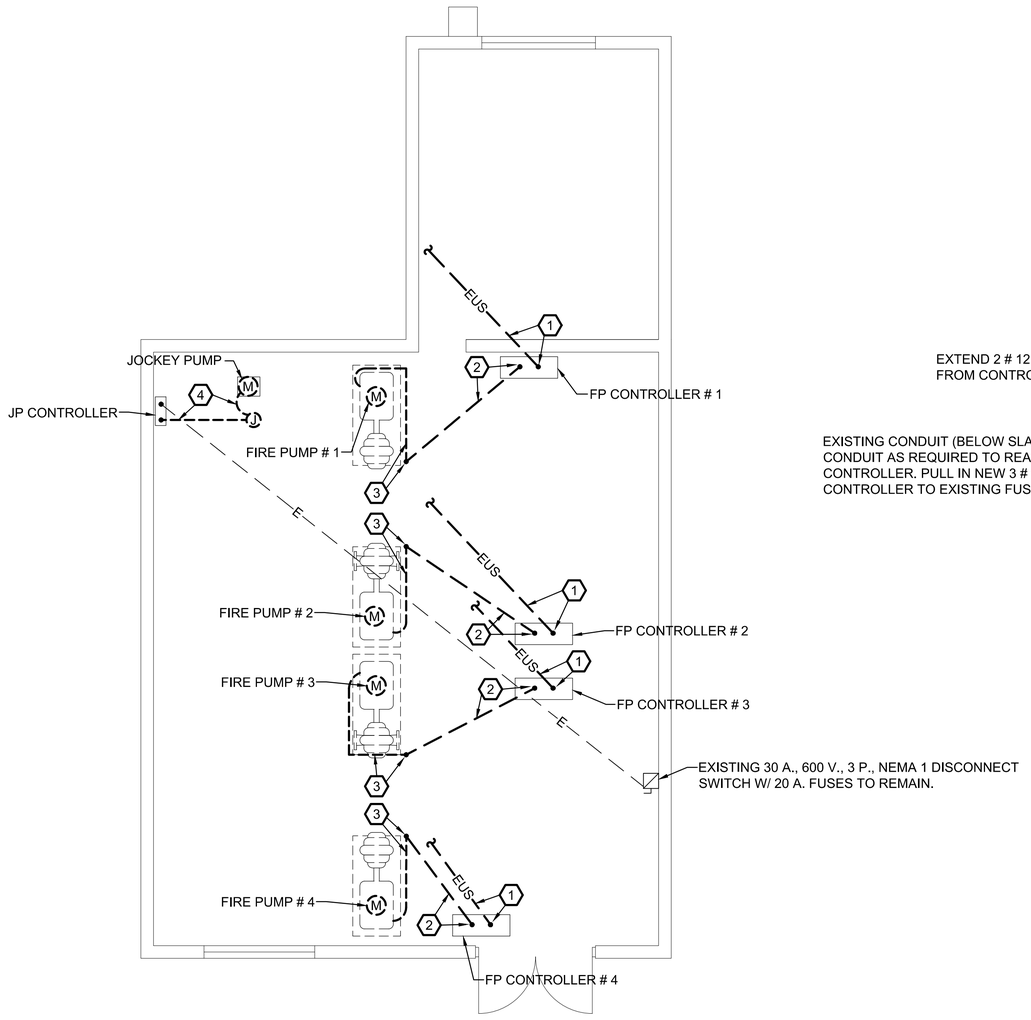

ELECTRICAL PLAN - BUILDING 90036 - DEMOLITION

SCALE: 1/4" = 1'-0"

NORTH

DEMOLITION WORK NOTES:

1. REMOVE EXISTING SERVICE CONDUCTORS BACK TO EXISTING PAD MOUNTED TRANSFORMER. SEE "ELECTRICAL SITE PLAN," SHEET E-2, FOR CONTINUATION. CUT EXISTING CONDUIT OFF FLUSH W/ FLOOR & FILL WITH NON-SHRINK GROUT. ABANDON EXISTING CONDUIT BELOW FLOOR SLAB.
2. REMOVE EXISTING CONDUCTORS. CUT EXISTING CONDUIT OFF FLUSH W/ FLOOR & FILL WITH NON-SHRINK GROUT. ABANDON EXISTING CONDUIT BELOW FLOOR SLAB.
3. REMOVE EXISTING LB FITTING AND EXPOSED CONDUIT & WIRING. CUT EXISTING CONDUIT OFF FLUSH W/ FLOOR & FILL WITH NON-SHRINK GROUT.
4. REMOVE EXISTING EXPOSED CONDUIT, WIRING & JUNCTION BOX.

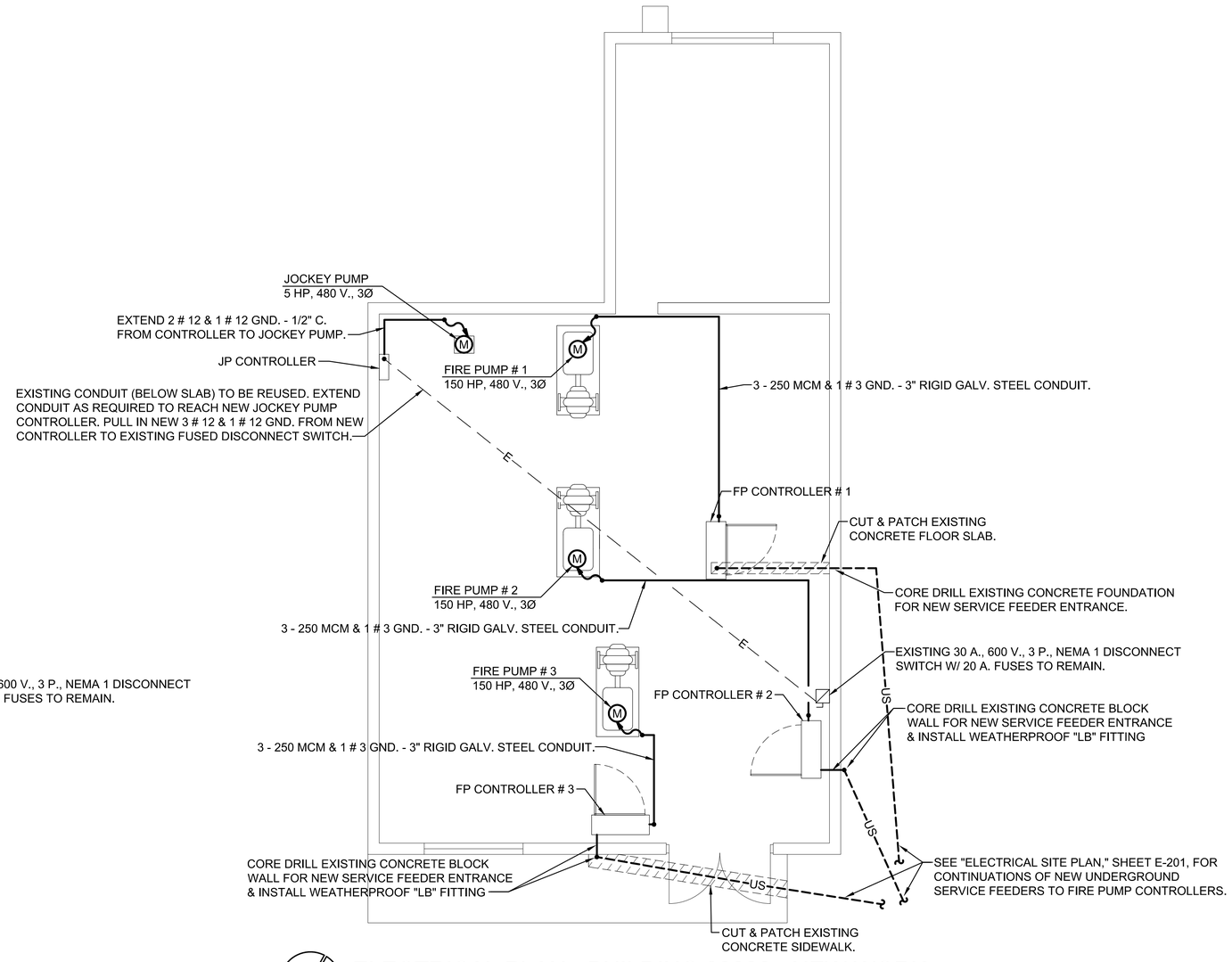

ELECTRICAL PLAN - BUILDING 90036 - NEW WORK

SCALE: 1/4" = 1'-0"

NORTH

GENERAL NOTES:

1. EMT CONDUIT IS NOT PERMITTED IN FIRE PUMP ROOMS. INSTALL RIGID GALV. STEEL CONDUITS.

GRAPHIC SCALE

1/4" = 1'-0" 4' 0' 4' 8' 12' 16'

EARL W. WYNN E-19908 PENSACOLA FLORIDA PROFESSIONAL ENGINEER

REV #	DATE	DESCRIPTION

INSTALL FIRE SUPPRESSION, BUILDING 90029

ELECTRICAL PLANS - BUILDING 90036

AIR FORCE SPECIAL OPERATIONS COMMAND
1 SPECIAL OPERATIONS CIVIL ENGINEER SQUADRON
HURLBURT FIELD, FLORIDA

DATE:	22 JULY 2020
DESIGNED BY:	EWW/JRH
DRAWN BY:	JRH
BUILDING NUMBER:	90029
PROJECT NUMBER:	CP1026753
SHEET REFERENCE:	E-202
SHEET NUMBER:	29 OF 35

KITCHEN
119

MECH.
108

WOMEN'S
LATRINE
105

RSFACU

ELECTRICAL
123

ENTRY
FOYER
107

ELEV.
EQUIP.
109

JAN
CLOSET
126

STAIR
NO. 1
110

MEN'S
LATRINE
106

TELE/
COMM
112

INSPECTION
OFFICE
113

MAINTENANCE
HANGER BAY
101

STOR.
2
118

MOBILITY
EQUIPMENT
117

EQUIPMENT
YARD
125

FIRE RISER
122

FOAM RISER
116

MECH.
115

ELEC.
ROOM # 1
114

EXTEND 2 # 12 & 1 # 12 GND. - 1/2" C. FROM NEW FOAM CONTROL PANEL TO 20 A., 1 P. BREAKER IN NEW PANEL "FP," INSTALL INLINE SURGE PROTECTIVE DEVICE (EDCO # HSP-121A OR EQUAL) ON 120 VOLT CIRCUIT & CONNECT TO NEW FOAM SYSTEM CONTROL PANEL.

HOMERUN TO NEW PANEL "FP"

SEE "LARGE SCALE POWER PLAN - ELECTRICAL ROOM," SHEET E-401, FOR WORK IN THIS ROOM.

SEE "LARGE SCALE POWER PLAN - RISER ROOMS," SHEET E-401, FOR WORK IN THESE ROOMS.

CLASSIFIED ENVIRONMENT NOTE:

IN ACCORDANCE WITH THE NATIONAL ELECTRICAL CODE, ARTICLE 513, THE ENTIRE HANGAR INCLUDING ANY ADJACENT AND COMMUNICATING AREAS NOT SUITABLY CUT OFF FROM THE HANGAR, SHALL BE CLASSIFIED AS CLASS I, DIVISION 2 FROM THE FLOOR LEVEL TO A POINT 18" ABOVE THE FLOOR. THE AREA WITHIN 5'-0" HORIZONTALLY FROM AIRCRAFT POWER PLANTS OR FUEL TANKS, AND FROM THE FLOOR TO 5-0" ABOVE THE UPPER SURFACE OF WINGS AND OF ENGINE ENCLOSURES SHALL BE CLASSIFIED AS CLASS I, DIVISION 2.

NORTH

ELECTRICAL PLAN - HANGAR 90029 - FIRST FLOOR

SCALE: 1/8" = 1'-0"

GRAPHIC SCALE

1/8" = 1'-0" 8' 0' 8' 16' 24' 32'

EARL W. WYNN
E-19908
PENSACOLA
FLORIDA
PROFESSIONAL ENGINEER

REV #	DATE	DESCRIPTION

INSTALL FIRE SUPPRESSION, BUILDING 90029

ELECTRICAL PLAN - HANGAR 90029 - FIRST FLOOR

AIR FORCE SPECIAL OPERATIONS COMMAND
1 SPECIAL OPERATIONS CIVIL ENGINEER SQUADRON
HURLBURT FIELD, FLORIDA

DATE:	22 JULY 2020
DESIGNED BY:	EWW/JRH
DRAWN BY:	JRH
BUILDING NUMBER:	90029
PROJECT NUMBER:	CP1026753
SHEET REFERENCE:	E-203
SHEET NUMBER:	30 OF 35

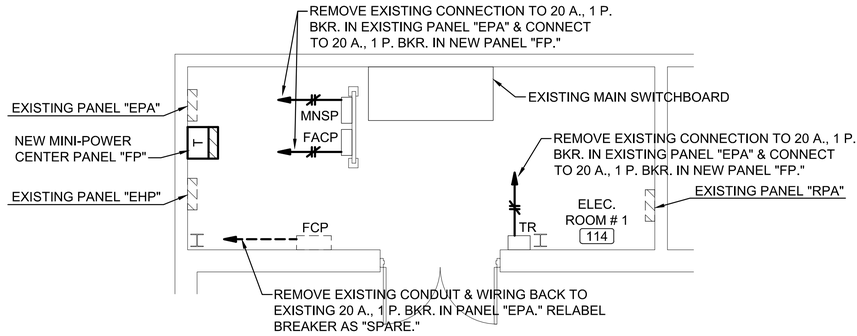

LARGE SCALE POWER PLAN - ELECTRICAL ROOM

SCALE: 1/4" = 1'-0"

DEMOLITION NOTE:

THE CONTRACTOR SHALL PROVIDE NEW TYPEWRITTEN DIRECTORIES ON ALL PANELS THAT HAVE CIRCUITS REMOVED. NEW DIRECTORIES SHALL SHOW BREAKERS LABELED AS "SPARE" WHERE CIRCUITS HAVE BEEN REMOVED. ALL SPARE BREAKERS SHALL BE LEFT IN THE OFF POSITION.

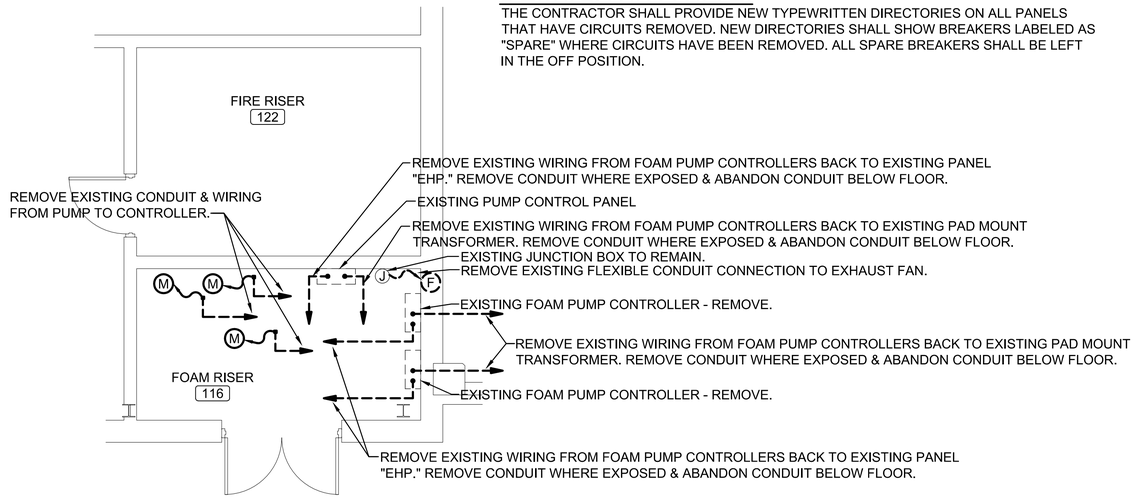

LARGE SCALE POWER PLAN - RISER ROOMS - DEMOLITION

SCALE: 1/4" = 1'-0"

GRAPHIC SCALE

1/4" = 1'-0"

4' 0' 4' 8' 12' 16'

EARL W. WYNN E-19908 PENSACOLA, FLORIDA PROFESSIONAL ENGINEER

REV #	DATE	DESCRIPTION

INSTALL FIRE SUPPRESSION, BUILDING 90029

LARGE SCALE POWER PLANS

AIR FORCE SPECIAL OPERATIONS COMMAND
1 SPECIAL OPERATIONS CIVIL ENGINEER SQUADRON
HURLBURT FIELD, FLORIDA

DATE: 22 JULY 2020
DESIGNED BY: EWW/JRH
DRAWN BY: JRH
BUILDING NUMBER: 90029
PROJECT NUMBER: CP1026753
SHEET REFERENCE: E-401
SHEET NUMBER: 31 OF 35

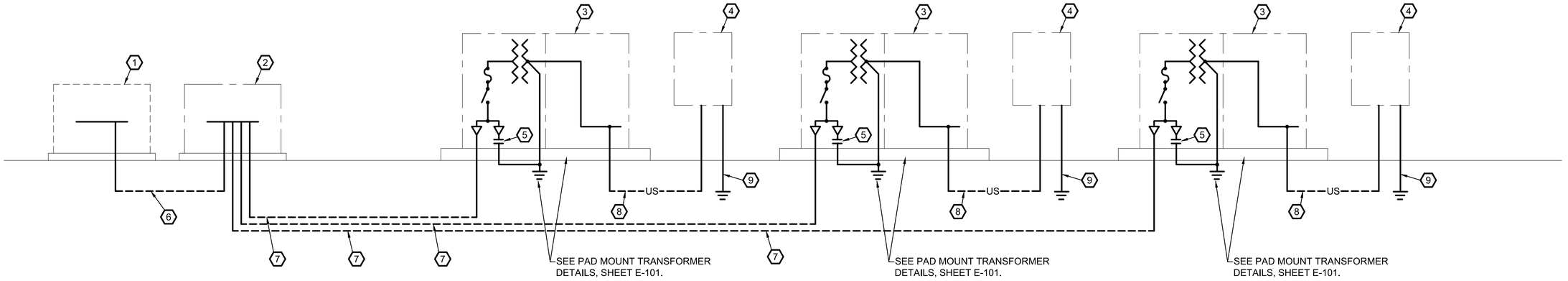

SINGLE LINE DIAGRAM - BUILDING 90036

NO SCALE

WORK NOTES:

1. EXISTING PRIMARY JUNCTION CABINET.
2. NEW PRIMARY JUNCTION CABINET W/ (3) 200 A., 4 POINT JUNCTIONS.
3. NEW PAD MOUNTED TRANSFORMER - 225 KVA, 3Ø, 12.47 KV PRIMARY TO 480Y/277V. SECONDARY.
4. NEW FIRE PUMP CONTROLLER - SERVICE ENTRANCE RATED.
5. 9 KV SURGE ARRESTER - CONNECT TO LOOP FEED LUG & BOND TO GROUND GRID.
6. 3 # 2 (15 KV) TYPE "EPR" W/ 1/3 CONCENTRIC NEUTRAL IN 4 - 2" HDPE, SDR 13.5 CONDUITS.
7. 3 # 2 (15 KV) TYPE "EPR" W/ 1/3 CONCENTRIC NEUTRAL IN 4 WAY 2" CONCRETE ENCASED DUCT BANK.
8. 3 - 250 MCM - 3" PVC, SCH. 40 CONDUIT.
9. # 2 COPPER GROUND TO 3/4" X 20'-0" COPPERCLAD GROUND ROD. BOND ALL THREE FIRE PUMP SERVICE GROUNDS TOGETHER AND BOND TO EXISTING SERVICE GROUND AT EXISTING MAIN PANEL.

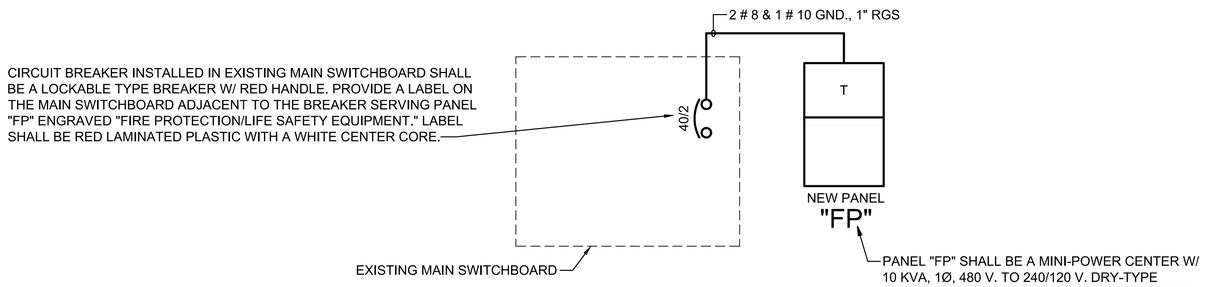

SINGLE LINE DIAGRAM - BUILDING 90029

NO SCALE

PAD MOUNTED TRANSFORMER SIZING:

FIRE PUMP (149.6 KW X 125%) = 187.0 KW

PAD MOUNTED TRANSFORMER SHALL BE 225 KVA.

PAD MOUNTED TRANSFORMER PRIMARY FUSE SIZING:

FIRE PUMP LOCKED ROTOR AMPACITY (180 FLA X 6) = 1080 LRA

PAD MOUNTED TRANSFORMER PRIMARY OVERCURRENT PROTECTION:

LRC primary = (VOLTAGE secondary / VOLTAGE primary) X LRA

LRC primary = (480 V. / 12470 V.) X 1080 A.

LRC primary = 0.0385 X 1080

LRC primary = 41.57 A.

PAD MOUNT TRANSFORMER PRIMARY FUSING SHALL CONSIST OF 65 A. BAYONET FUSES IN SERIES WITH 65 A. CURRENT LIMITING EXPULSION FUSES.

PANELBOARD SCHEDULE

NEW PANEL "FP" — 480 V., 1Ø TRANSFORMER INPUT; 240/120 V., 1 Ø, 3 W. TRANSFORMER OUTPUT; 50 A., 2 P., 240 V. SECONDARY MAIN BREAKER; 25 KAIC INTERRUPTING RATING; SURFACE MOUNTED MINI-POWER CENTER W/ 10 KVA, 1Ø DRY-TYPE TRANSFORMER & INTEGRAL PANELBOARD W/ GROUND BUS BONDED TO NEUTRAL BUS

LOAD SERVED	LOAD (AMPS) A	LOAD (AMPS) B	BREAKER AMP	BREAKER POLE	BRANCH WIRE	BRANCH CONDUIT	CKT. #	CKT. #	BRANCH CONDUIT	BRANCH WIRE	BREAKER POLE	BREAKER AMP	LOAD (AMPS) A	LOAD (AMPS) B	LOAD SERVED
FIRE ALARM PANEL	6.0		20	1	# 12	1/2"	1	2	1/2"	# 12	1	20	8.0		MASS NOTIFICATION PANEL
FOAM CONTROL PANEL RSFACU		3.0	20	1	# 12	1/2"	3	4	1/2"	# 12	1	20		10.0	BLUE BEACON LIGHTS
TRANSCEIVER	4.0		20	1	# 12	1/2"	5	6			1	20			SPARE
SPARE			20	1			7	8			1	20			SPARE
SPARE			20	1			9	10			1	20			SPARE
SPACE ONLY				1			11	12			1				SPACE ONLY
TOTAL CONNECTED LOAD (AMPS):							A 18.0	B 13.0							

PANEL "FP" NOTE:

ALL CIRCUIT BREAKERS INSTALLED IN PANEL "FP" SHALL BE LOCKABLE TYPE BREAKERS W/ RED HANDLES. PAINT THE ENTIRE MINI-POWER CENTER ENCLOSURE RED. PROVIDE A LABEL ON PANEL "FP" ENGRAVED "FIRE PROTECTION/LIFE SAFETY EQUIPMENT." LABEL SHALL BE RED LAMINATED PLASTIC WITH A WHITE CENTER CORE.

EARL W. WYNN E-19908 PENSACOLA, FLORIDA PROFESSIONAL ENGINEER

REV #	DATE	DESCRIPTION

INSTALL FIRE SUPPRESSION, BUILDING 90029

SINGLE LINE DIAGRAMS

AIR FORCE SPECIAL OPERATIONS COMMAND
1 SPECIAL OPERATIONS CIVIL ENGINEER SQUADRON
HURLBURT FIELD, FLORIDA

DATE: 22 JULY 2020
DESIGNED BY: EWW/JRH
DRAWN BY: JRH
BUILDING NUMBER: 90029
PROJECT NUMBER: CP1026753
SHEET REFERENCE: E-601
SHEET NUMBER: 32 OF 35

STRUCTURAL - GENERAL NOTES

1. TO THE BEST OF OUR KNOWLEDGE, THE STRUCTURAL PLANS AND SPECIFICATIONS COMPLY WITH THE APPLICABLE REQUIREMENTS OF THE FOLLOWING GOVERNING DESIGN CODES:
   - A. INTERNATIONAL BUILDING CODE 2018 EDITION
   - B. AISC STEEL CONSTRUCTION MANUAL (15TH EDITION)
   - C. MINIMUM DESIGN LOADS FOR BUILDINGS AND OTHER STRUCTURES (ASCE 7-16)
   - D. STRUCTURAL WELDING CODE AWS D1.1, 2015
   - E. UNIFIED FACILITIES CRITERIA, STRUCTURAL ENGINEERING 1 OCTOBER 2019
   - F. UNIFIED FACILITIES CRITERIA, DoD BUILDING CODE 8 OCTOBER 2019
   - G. UNIFIED FACILITIES CRITERIA, UFC 4-010-01 DoD MINIMUM ANTITERRORISM STANDARDS FOR BUILDINGS 12 DECEMBER 2018

2. THE STRUCTURAL DOCUMENTS ARE TO BE USED IN CONJUNCTION WITH THE MECHANICAL AND ELECTRICAL. USE THESE NOTES IN CONJUNCTION WITH THE PROJECT SPECIFICATIONS. IF A CONFLICT EXISTS, THE MORE STRINGENT GOVERNS.

3. SEE PROJECT SPECIFICATIONS FOR TESTING.

4. THE CONTRACTOR SHALL REVIEW ALL CONTRACT DOCUMENTS; INCLUDING DIMENSIONS, AND SITE CONDITIONS AND COORDINATE WITH FIELD DIMENSIONS AND PROJECT SHOP DRAWINGS PRIOR TO CONSTRUCTION. ANY AND ALL DISCREPANCIES SHALL BE SUBMITTED IN WRITING TO ***CONTRACTING OFFICER***. DO NOT MODIFY OR CHANGE THE SIZE OR DIMENSIONS OF STRUCTURAL MEMBERS WITHOUT WRITTEN INSTRUCTIONS FROM THE ***CONTRACTING OFFICER***.

5. IT SHALL BE THE RESPONSIBILITY OF THE SUBCONTRACTOR TO LOCATE ANY AND ALL EXISTING UTILITIES WHETHER SHOWN HEREON OR NOT, AND TO PROTECT EXISTING FACILITIES, STRUCTURES AND UTILITY LINES FROM ALL DAMAGE. EACH CONTRACTOR SHALL PROTECT HIS WORK, ADJACENT PROPERTY AND THE PUBLIC. EACH CONTRACTOR IS SOLELY RESPONSIBLE FOR DAMAGE OR INJURY DUE TO HIS ACT OR NEGLECT.

6. WHERE A CONSTRUCTION DETAIL IS NOT SHOWN OR NOTED, THE DETAIL SHALL BE THE SAME AS FOR OTHER SIMILAR WORK. DETAILS LABELED "TYPICAL DETAILS" ON THE DRAWINGS APPLY TO ALL SITUATIONS THAT ARE THE SAME OR SIMILAR TO THOSE SPECIFICALLY DETAILED. ANY QUESTIONS REGARDING APPLICABILITY OF TYPICAL DETAILS SHALL BE RESOLVED BY THE ARCHITECT / ENGINEER.

7. DESIGN LOAD CRITERIA:
   - A. BUILDING RISK CATEGORY. II
   - B. GRAVITY LOADS:
     - a. FOAM GENERATOR LOAD (EA.) . . . . . .647 LB
   - C. SEISMIC LOADS:SEISMIC IMPORTANCE FACTOR Ie. 1.0
     - a. SEISMIC RESPONSE, Ss . . . . . (0.075) 7.5%
     - b. SEISMIC RESPONSE, S1 . . . . . (0.053) 5.3%
     - c. SPECTRAL RESPONSE, Sds. 0.065g
     - d. SPECTRAL RESPONSE, Sd1. . . . . .0.053g

STRUCTURAL STEEL NOTES

1. REFERENCE STANDARDS: STRUCTURAL STEEL SHALL BE DETAILED, FABRICATED AND ERECTED IN ACCORDANCE WITH THE AISC STEEL CONSTRUCTION MANUAL AND THE AISC CODE OF STANDARD PRACTICE (REFERENCED EDITION) WITH EXCEPTION NOTED IN THE PROJECT SPECIFICATIONS.

2. MATERIAL REQUIREMENTS OF STRUCTURAL STEEL SHALL CONFORM TO THE FOLLOWING DESIGNATIONS U.N.O.
   - A. ANGLES, CHANNELS, AND PLATES . . . . ASTM A36 OR ASTM A572, GRADE 50
   - B. HSS SECTIONS . . . . . ASTM A500, GRADE "B" (Fy = 46KSI)
   - C. HIGH STRENGTH BOLTS . . . . . ASTM A325 OR ASTM A490
   - D. WELDING ELECTRODES . . . . . AWS D1.1 E70

3. USE STRUCTURAL STEEL THAT IS FULLY WELDABLE INCLUDING WHEN WELDING BETWEEN DIFFERENT GRADES OF STEEL. SHOP WELDING SHALL BE UTILIZED IN LIEU OF FIELD WELDING WHEN OBTAINABLE.

4. ALL SHOP AND FIELD WELDING SHALL CONFORM TO THE STRUCTURAL WELDING CODE AWS D1.1, LATEST EDITION, PUBLISHED BY THE AMERICAN WELDING SOCIETY (AWS). USE ELECTRODES CONFORMING TO AWS D1.1, E70 SERIES, U.N.O. SHOW ALL SHOP WELDS ON THE FABRICATION DRAWINGS AND ALL FIELD WELDS ON THE ERECTION DRAWINGS. WELD SIZES AND LENGTHS ARE SHOWN ON THE DRAWINGS. WELD SIZES ARE THE NET EFFECTIVE SIZE REQUIRED. INCREASE THE WIDTH OF THE WELD IF A GAP EXISTS AT FAYING SURFACES. MINIMUM FILLET WELD SIZE IS 3/16".

5. ALL SHOP AND FIELD WELDERS, WELDING OPERATORS, AND TACKERS SHALL BE CERTIFIED ACCORDING TO AWS PROCEDURES AND HAVE EVIDENCE OF PASSING THE AWS STANDARD QUALIFICATION TESTS. CERTIFICATION MUST BE CURRENT.

6. FIELD MODIFICATION OF STRUCTURAL STEEL SHALL NOT BE CUT IN FIELD OR MODIFIED WITHOUT PRIOR APPROVAL OF THE ENGINEER. SPLICING STEEL MEMBERS IS NOT PERMITTED EXCEPT WHERE EXPLICITLY SHOWN ON THE STRUCTURAL DRAWINGS OR WHERE APPROVED BY THE ENGINEER OF RECORD. SPLICES SHALL NOT OCCUR AT LOCATIONS OF MAXIMUM STRESS AND SHALL DEVELOP THE FULL CAPACITY OF THE MEMBER. SPLICE DETAILS SHALL BE SUBMITTED FOR APPROVAL PRIOR TO BEGINNING WORK.

7. WHEN HOLES ARE REQUIRED IN METAL SURFACE, THEY SHALL BE CUT, DRILLED, OR PUNCHED HOLES PERPENDICULAR TO METAL SURFACE. IN NO INSTANCE IS IT ADEQUATE TO USE A FLAME TO CUT OR ENLARGE HOLES IN STRUCTURAL STEEL MEMBERS.

8. THE STEEL SUPPLIER SHALL PROVIDE ALL MISCELLANEOUS STRUCTURAL STEEL ITEMS NECESSARY TO FULFILL THE INTENT OF THE STRUCTURAL DRAWINGS WHETHER OR NOT THE ITEMS ARE SHOWN ON THE STRUCTURAL DRAWINGS. SUCH ITEMS MAY INCLUDE BUT ARE NOT LIMITED TO EDGE ANGLES, CLOSURE PLATES, AND DECK SUPPORT FRAMING.

9. ALL EXTERIOR EXPOSED STEEL SHALL BE HOT DIP GALVANIZED.

10. ALL STRUCTURAL STEEL SHALL BE PRIME PAINTED WITH A MINIMUM DRY FILM THICKNESS OF 2.0 MILS.

11. SEE ARCHITECTURAL DRAWINGS FOR ADDITIONAL MISCELLANEOUS STEEL THAT WILL BE REQUIRED

FIRE SUPPRESSION PIPE SUPPORT

1. CONTRACTOR TO INSTALL PER ALL NFPA AND APPLICABLE BUILDING CODE REQUIREMENTS. CONTRACTOR SHALL SUBMIT DETAILED SHOP DRAWINGS SHOWING ALL NFPA AND APPLICABLE BUILDING CODE REQUIREMENTS.

2. THREADED RODS SECTIONS SHALL NOT BE FORMED OR BENT.

PETERSON ENGINEERING INC.
(PROF. ENG. #: 3600)
75 SOUTH "F" STREET
PENSACOLA, FLORIDA 32502
(850) 434-0513
PEI JOB #2018042

DONALD J McCAY
LICENSE NUMBER
STATE OF FLORIDA
PROFESSIONAL ENGINEER
7.22.07.22

REV #	DATE	DESCRIPTION

INSTALL FIRE SUPPRESSION, BUILDING 90029

GENERAL NOTES

AIR FORCE SPECIAL OPERATIONS COMMAND
1 SPECIAL OPERATIONS CIVIL ENGINEER SQUADRON
HURLBURT FIELD, FLORIDA

DATE:
22 JULY 2020

DESIGNED BY:
DJM

DRAWN BY:
WEH

BUILDING NUMBER:
90029

PROJECT NUMBER:
CP1026753

SHEET REFERENCE:
S-001

SHEETNUMBER:
33 OF 35

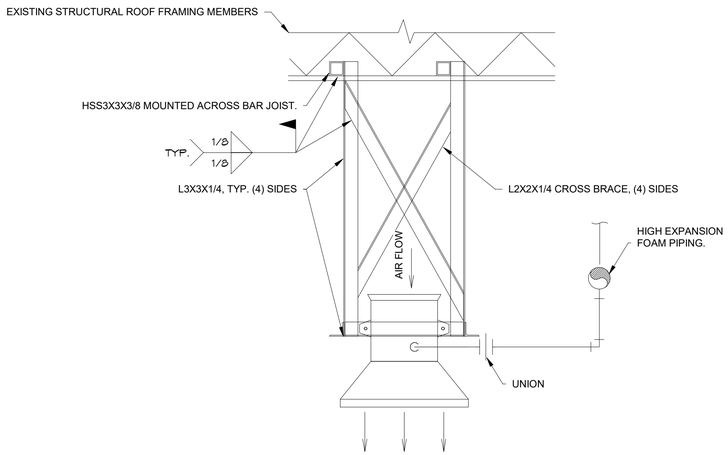

2 FOAM GENERATOR HANGING CONNECTION
3/4" = 1'-0"

NOTE:

1. IF HANGER IS INSTALLED MORE THAN 4" AWAY FROM PANEL POINT, CHORD SHALL BE BRACED BACK TO PANEL POINT PER THIS DETAIL.

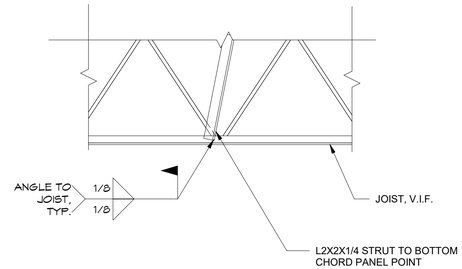

3 BOTTOM CHORD JOIST REINF.
3/4" = 1'-0"

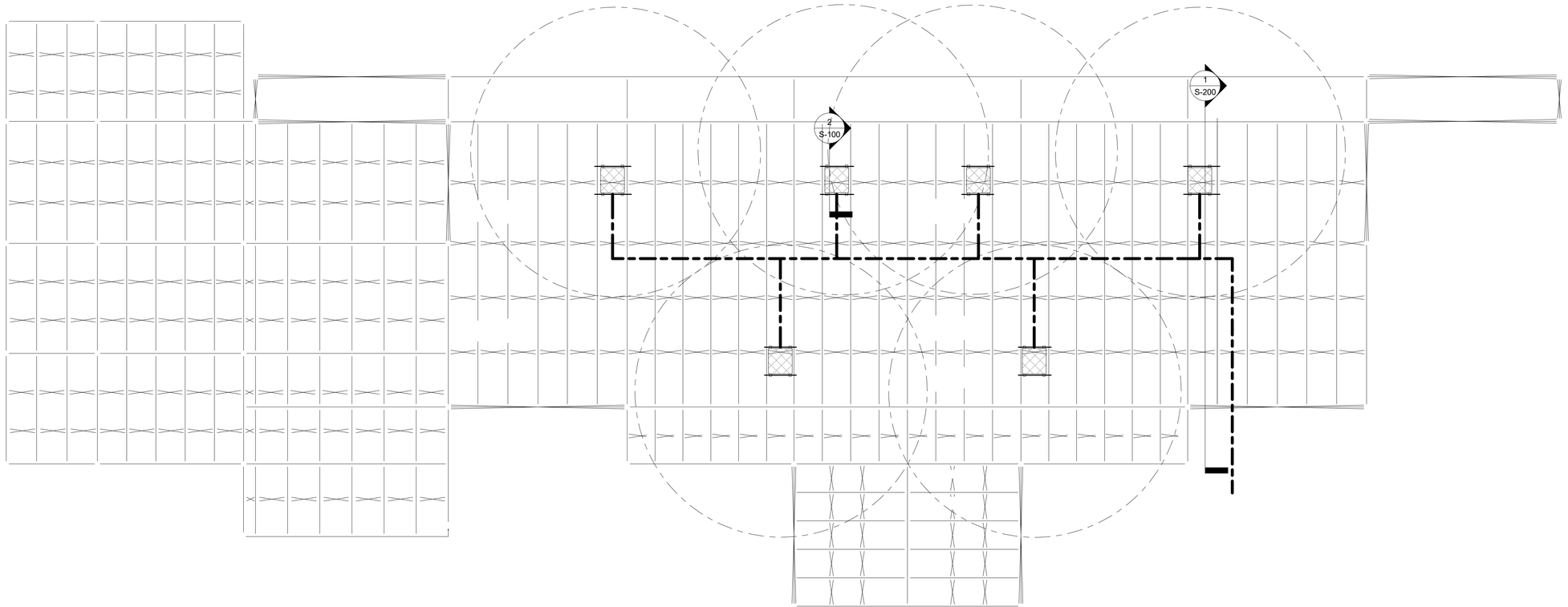

1 FOAM GENERATOR STRUCTURAL FRAMING
3/32" = 1'-0"

PETERSON ENGINEERING INC.
(PROF. ENG. #: 3600)
75 SOUTH "F" STREET
PENSACOLA, FLORIDA 32502
(850) 434-0513
PEI JOB #2018042

REV #	DATE	DESCRIPTION

INSTALL FIRE SUPPRESSION, BUILDING 90029

FOAMER LOCATION PLAN & DETAIL(S)

AIR FORCE SPECIAL OPERATIONS COMMAND
1 SPECIAL OPERATIONS CIVIL ENGINEER SQUADRON
HURLBURT FIELD, FLORIDA

DATE: 22 JULY 2020
DESIGNED BY: DJM
DRAWN BY: WEH
BUILDING NUMBER: 90029
PROJECT NUMBER: CP1026753
SHEET REFERENCE: S-100
SHEETNUMBER: 34 OF 35

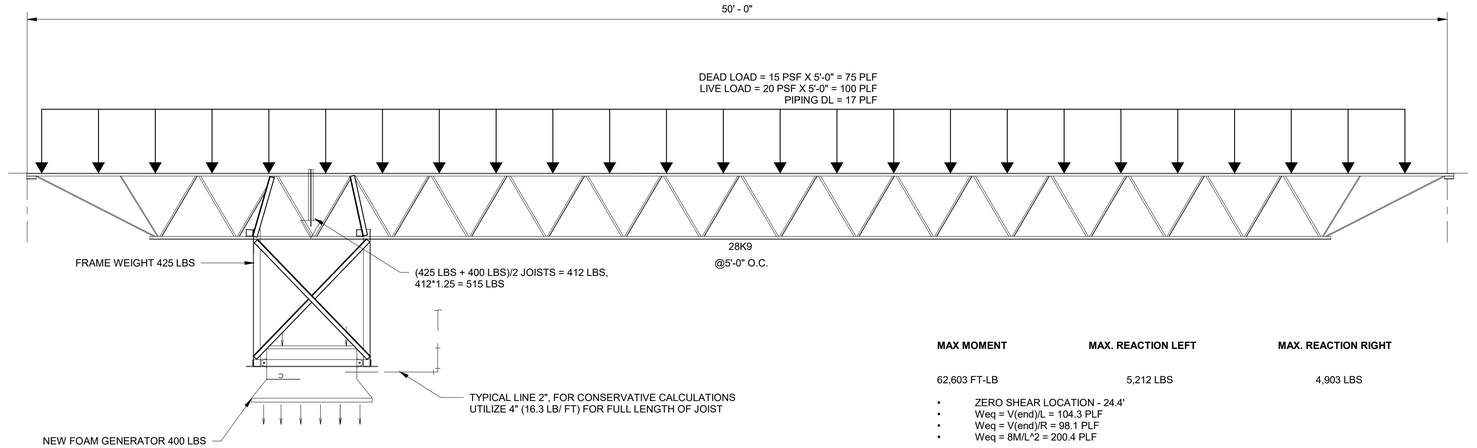

MAX MOMENT	MAX. REACTION LEFT	MAX. REACTION RIGHT
62,603 FT-LB	5,212 LBS	4,903 LBS

- ZERO SHEAR LOCATION - 24.4'
- Weq = V(end)/L = 104.3 PLF
- Weq = V(end)/R = 98.1 PLF
- Weq = 8M/L^2 = 200.4 PLF

JOIST CAPACITY = 228 PLF > 200.4 PLF, THEREFORE JOIST WILL HAVE THE REQUIRED CAPACITY TO RESIST THE NEW PIPING AND FOAM GENERATOR

1 JOIST LOADING
3/8" = 1'-0"

PETERSON ENGINEERING INC.
(PROF. ENG. #: 3600)
75 SOUTH "F" STREET
PENSACOLA, FLORIDA 32502
(850) 434-0513
PEI JOB #2018042

REV # | DATE | DESCRIPTION

INSTALL FIRE SUPPRESSION, BUILDING 90029

JOIST LOADING

AIR FORCE SPECIAL OPERATIONS COMMAND
1 SPECIAL OPERATIONS CIVIL ENGINEER SQUADRON
HURLBURT FIELD, FLORIDA

DATE: 22 JULY 2020
DESIGNED BY: DJM
DRAWN BY: WEH
BUILDING NUMBER: 90029
PROJECT NUMBER: CP1026753
SHEET REFERENCE: S-200
SHEETNUMBER: 35 OF 35