HVAC LEGEND

SYMBOL	ITEM
WxH	RECTANGULAR DUCTWORK, SIZES SHOWN ARE INTERNAL CLEAR DIMENSIONS (WIDTH x HEIGHT).
WxH	INTERNALLY LINED RECTANGULAR DUCTWORK, SIZES SHOWN ARE INTERNAL CLEAR DIMENSIONS.
8"	ROUND SNAPLOCK GALVANIZED STEEL DUCKTWORK, EXTERNALLY INSULATED, SMACNA STATIC PRESSURE CONSTRUCTION CLASS 1/2" W.G., SEAL CLASS C. SIZE SHOWN IS SHEET METAL DIAMETER. SHALL BE USED ONLY AT RUNOUTS TO AIR OUTLETS.
	FACTORY FABRICATED/INSULATED FLEXIBLE ROUND DUCT, SIZE SHOWN IS INSIDE DIAMETER.
16"	ROUND SPIRAL SEAM GALVANIZED STEEL DUCTWORK, EXTERNALLY INSULATED. SIZE SHOWN IS SHEET METAL DIAMETER. SMACNA STATIC PRESSURE CLASS 4" W.G., SEAL CLASS C.
	SQUARE THROAT ELBOW IN RECTANGULAR DUCT WITH DOUBLE WALL TURNING VANES.
	LONG RADIUS ELBOW IN RECTANGULAR DUCT.
	FLEXIBLE DUCT CONNECTION
	TRANSITION
	RECTANGULAR TO ROUND DUCT TRANSITION.
	RECTANGULAR BRANCH DUCT TAKE OFF FROM RECTANGULAR DUCT MAIN WITH 45° COLLAR.
	RECTANGULAR DUCTWORK TURNING 90° UP.
	RECTANGULAR DUCTWORK TURNING 90° DOWN.
	CEILING DIFFUSER WITH 24"x24" FACE EQUAL TO "TITUS OMNI". PROVIDE SURFACE MOUNT STYLE FOR GYPSUM BOARD CEILING AND LAY-IN TYPE AT T-BAR CEILING GRID. ROUND NECK SIZE AND AIRFLOW AS INDICATED. 4-WAY DIRECTION OF THROW. PROVIDE WITH OPPOSED BLADE VOLUME CONTROL DAMPER BACK FACE OF DIFFUSER SHALL HAVE INSULATION BLANKET.

SYMBOL	ITEM
SD	SMOKE DETECTOR
	FLEXIBLE PIPE CONNECTOR
	PRESSURE GAGE WITH GAGE COCK
P/T	COMBINATION PRESSURE AND TEMPERATURE TEST PLUG WITH EXTENDED NECK AND CAP
C	CONDENSATE PIPING
	ELBOW TURN UP
	ELBOW TURN DOWN
	CONNECTION, TOP
	CONNECTION, BOTTOM
MS	MOTOR STARTER
H	SPACE HUMIDITY SENSOR, MOUNT 48" A.F.F.; PROVIDE LOCKING THERMOSTAT COVER
T #	SPACE THERMOSTAT SERVING UNIT #, MOUNT 48" A.F.F.; PROVIDE LOCKING THERMOSTAT COVER
	MANUAL VOLUME DAMPER, PROVIDE WITH LOCKING QUADRANT
	TRANSITION POINT IN CHWS/R OR HWS/R PIPING
U	DOOR UNDERCUT
	ROUND BRANCH DUCT TAKEOFF FROM RECTANGULAR DUCT MAIN. BRANCH DUCT SHALL BE FLEXIBLE ROUND DUCT OR ROUND SNAPLOCK DUCT AS INDICATED. ROUND DUCT TAP IN SHALL BE MADE WITH SPIN-IN COLLAR WITH MANUAL VOLUME DAMPER.

SYMBOL	ITEM
	NEW CONNECTION POINT
	DISCONNECTION POINT
	DUCTWORK TO BE DEMOLISHED
M	MOTORIZED DAMPER
FD/FSD, DUCT	FIRE DAMPER/COMBINATION FIRE SMOKE DAMPER WITH ACTUATORS AND ACCESS PANELS
# / #	NUMBER ON SHEET WHERE SECTION OCCURS SHEET WHERE SECTION OCCURS
# / M-# M-#	LETTER INDICATES SECTION SHEET WHERE SECTION IS DRAWN SHEET WHERE SECTION OCCURS
FD	HORIZONTAL FIRE DAMPER IN FLOOR/CEILING

ROOM SETPOINT SCHEDULE

SPACE	COOLING SETPOINT	HEATING SETPOINT	HUMIDITY SETPOINT	NIGHT SETBACK COOLING SETPOINT	NIGHT SETBACK HEATING SETPOINT	NIGHT SETBACK HUMIDITY SETPOINT	DEADBAND
INSIDE - GENERAL	74 DEG F	68 DEG F	50% RH	85 DEG F	55 DEG F	65% RH	3 DEG F

CODE REFERENCES

1. ALL WORK SHALL COMPLY WITH ALL LOCAL BUILDING CODES, LAWS, REGULATIONS, ORDINANCES, AND CODES AS FOLLOWS:
   - 1.1 ACCESIBILITY: FLORIDA BUILDING CODE - 2023 8TH EDITION
   - 1.2 ENERGY CONSERVATION: FLORIDA BUILDING CODE - 2023 8TH EDITION
   - 1.3 BUILDING: FLORIDA BUILDING CODE - 2023 8TH EDITION
   - 1.4 EXISTING BUILDING: FLORIDA BUILDING CODE - 2023 8TH EDITION
   - 1.5 FUEL GAS: FLORIDA BUILDING CODE - 2023 8TH EDITION
   - 1.6 MECHANICAL: FLORIDA BUILDING CODE - 2023 8TH EDITION
   - 1.7 PLUMBING: FLORIDA BUILDING CODE - 2023 8TH EDITION
   - 1.8 NATIONAL ELECTRICAL CODE - 2014 EDITION
   - 1.9 NATIONAL FIRE PROTECTION ASSOCIATION (NFPA) 101, 2015 LIFE SAFETY CODE FOR FLORIDA
   - 1.10 APPLICABLE CODE SECTIONS AS REQUIRED BY FLORIDA ADMINISTRATIVE CODE 69A-3.012
   - 1.11 AMERICANS WITH DISABILITY ACT 2010 (ADA 2010)

ABBREVIATIONS

ACD - AUTOMATIC CONTROL DAMPER
ACH - AIR CHANGE PER HOUR
ACT - ACOUSTICAL CEILING TILE
AHU - AIR HANDLING UNIT
AMB - AMBIENT
BV - BRICK VENT
CD - CEILING DIFFUSER
CFH - CUBIC FEET PER HOUR
CFM - CUBIC FEET PER MINUTE
CW - COLD WATER
DB - DRY BULB
DDC - DIRECT DIGITAL CONTROL
DG - DOOR GRILLE
DPS - DIFFERENTIAL PRESSURE SENSOR
EA - EXHAUST AIR
EAG - EXHAUST AIR GRILLE
EAL - EXHAUST AIR LOUVER
EF - EXHAUST FAN
ET - EXPANSION TANK
EX - EXISTING
FD - FIRE DAMPER
FSD - COMBINATION FIRE SMOKE DAMPER
FLR - FLOOR
FO - FLAT OVAL
FT - FEET
GPM - GALLONS PER MINUTE
HOA - HAND-OFF-AUTOMATIC
HGR - HOT GAS REHEAT
HP - HORSEPOWER
HW - HOT WATER
IAW - IN ACCORDANCE WITH
IPLV - INTEGRATED PART LOAD VALUE
LSD - LINEAR SLOT DIFFUSER
MAX - MAXIMUM
MBTU - THOUSAND BRITISH THERMAL UNIT
MH - MANHOLE
MIN - MINIMUM
MVD - MANUAL VOLUME DAMPER
NIC - NOT IN CONTRACT
OA - OUTSIDE AIR
OAL - OUTSIDE AIR LOUVER
RA - RETURN AIR
RPM - REVOLUTIONS PER MINUTE
SA - SUPPLY AIR
SPT - STATIC PRESSURE TRANSMITTER
SWR - SIDE WALL REGISTER
SWS - SIDE WALL SUPPLY GRILLE
SQ FT - SQUARE FEET
T'STAT - THERMOSTAT
TG - TRANSFER GRILLE
TS - TEMPERATURE SENSOR
TYP - TYPICAL
VAV - VARIABLE AIR VOLUME
VFD - VARIABLE FREQUENCY DRIVE
WB - WET BULB
SS - SANITARY SEWER

HVAC NOTES

1. T'STATS INDICATED ADJACENT TO DOORWAYS SHALL BE LOCATED WITHIN 18" OF JAMB. AT LOCATIONS WITH LIGHT SWITCHES, LOCATE T'STAT SUCH THAT LIGHT SWITCH IS BETWEEN T'STAT AND JAMB. T'STATS SHALL BE LOCATED 48" AFF. VERIFY T'STAT LOCATIONS WITH SYSTEMS FURNITURE LAYOUT PRIOR TO INSTALLING ANY T'STAT.

2. LOUVER DIMENSIONS INDICATED DOES NOT INCLUDE FRAME OR FLANGES. APPROXIMATE ROUGH OPENING IN WALL ASSEMBLY IS INDICATED ON ARCHITECTURAL.

3. ALL CONDENSATE PIPING SHALL BE INSULATED WITH CLOSED CELL INSULATION. PROVIDE ALUMINUM OR PVC JACKETING FOR ALL EXTERIOR CONDENSATE PIPING.

TYPICAL DUCTWORK & INSULATION NOTES

1. ALL ROUND FLEXIBLE DUCT SHALL BE FACTORY PREINSULATED WITH THERMOFLEX OR EQUAL. MAXIMUM LENGTH OF ANY FLEXIBLE DUCT RUNOUT SHALL BE 6'-0". WHERE LENGTH REQUIRED EXCEEDS 6'-0", INSTALL EXTERNALLY INSULATED ROUND SNAPLOCK DUCT FOR BALANCE OF DISTANCE TO SPIN-IN TAP AT MAIN DUCT TRUNK.

2. SEAL ALL DUCT PENETRATIONS OF WALLS AIRTIGHT, REGARDLESS OF WHETHER WALLS ARE FIRE RATED OR NOT.

3. ALL SUPPLY AIR DUCTWORK (EXCEPT TAKEOFFS TO SUPPLY AIR DIFFUSERS) SHALL BE LOW PRESSURE RECTANGULAR, SMACNA STATIC PRESSURE CLASS 1" W.G., SEAL CLASS C, EXTERNALLY INSULATED WITH 2" THICK FIBERGLASS DUCT WRAP.

4. ALL RETURN AIR DUCTWORK SHALL BE LOW PRESSURE RECTANGULAR, SMACNA STATIC PRESSURE CLASS 1" W.G., SEAL CLASS B. DUCT SIZES INDICATED ARE INSIDE CLEAR DIMENSIONS. PROVIDE 1" ACOUSTICAL LINER FOR FIRST 6' OF DUCT FROM EQUIPMENT. PROVIDE 2" THICK EXTERNAL FIBERGLASS WRAP.

5. ALL OUTSIDE AIR INTAKE DUCTWORK SHALL BE LOW PRESSURE RECTANGULAR, SMACNA STATIC PRESSURE CLASS 1" W.G., SEAL CLASS B. PROVIDE 2" THICK EXTERNAL FIBERGLASS WRAP.

6. EXHAUST AIR DUCTWORK SHALL BE LOW PRESSURE RECTANGULAR, SMACNA STATIC PRESSURE CLASS 1/2" W.G., SEAL CLASS B.

7. ALL DUCT SIZES INDICATED ARE INSIDE CLEAR DIMENSIONS.

8. AVOID ROUTING DUCTWORK OVER LIGHTS WHEREVER POSSIBLE. MAINTAIN MINIMUM 6" CLEARANCE BETWEEN DUCT INSULATION TO TOP OF LIGHTS.

9. ALL EXPOSED DUCTWORK SHALL BE 1" DOUBLE WALL SPIRAL (MIN. R=4.2) PAINTED W/ DRIP PROOF PAINT.

10. ALL GREASE DUCT SHALL BE WELDED CARBON STEEL OR STAINLESS STEEL IN ACCORDANCE W/ NFPA 96. PROVIDE ACCESS PANELS IN ACCORDANCE W/ NFPA 96 REQUIREMENTS. PROVIDE 1.5" FYRE WRAP ON ALL GREASE DUCT.

DocuSigned by:
12140CEE86E745E...
DS
4/6/2026 | 14:01:32 PDT

W3 Engineering Inc.
110 E. WRIGHT ST.
PENSACOLA, FL 32502
T: (850)629-8270
F: (888)478-4898
FL P.E. #: 70595
FL AUTHORIZATION #: 31078

Printed copies of this document are not to be considered original, the original is digitally signed

GMC
GOODWYN MILLS CAWOOD, LLC.
720 Bayfront Parkway, Suite 200
Pensacola, FL 32502
T 850.432.0706
GMCNETWORK.COM
Gerald Steven Jernigan - Qualifying Agent
FL Architect AR 0009953

ISSUE	DATE
PERMIT SET	12/08/2025

DRAWN BY: ACL
CHECKED BY: JEW3

FRICKER RESOURCE CENTER RENOVATION PROJECT
900 N F St, Pensacola, FL 32501-2887
GMC # APEN250016

DS
JAMES E. WELLS III
LICENSE
No. 70595
STATE OF
FLORIDA
PROFESSIONAL ENGINEER

LEGEND & GENERAL NOTES

M0.1

4/6/2026 3:47:02 PM

SHEET NOTES

KEY #	KEYNOTE TEXT
1	EXISTING EXHAUST FAN / ROOF CAP TO BE DEMOLISHED. CAP AND SEAL ROOF PENETRATION
2	EXISTING DUCTWORK, DIFFUSERS, GRILLES, AND ASSOCIATED APPURTENANCES TO BE DEMOLISHED BACK TO THE RTU
3	EXISTING EXHAUST FAN / ROOF CAP TO BE DEMOLISHED.
4	EXISTING PACKAGED HVAC UNIT TO BE DEMOLISHED. CAP AND SEAL ROOF PENETRATION
5	EXISTING HVAC EQUIPMENT TO REMAIN
6	DEMOLITION IN THIS AREA SHALL BE PART OF PHASE 2. EQUIPMENT AND DUCTWORK SHALL REMAIN IN OPERATION UNTIL THIS PHASE BEGINS
7	EXISTING EQUIPMENT AND DUCTWORK TO REMAIN
8	EXISTING RTU SHALL BE REMOVED, STORED, AND REINSTALLED WITH NEW CURB. DEMOLISH GAS PIPING AND PROVIDE NEW GAS PIPING AND REGULATOR. DEMOLISH EXISTING CONDENSATE PIPING AND PROVIDE NEW CONDENSATE PIPING. SEE PLUMBING GAS PIPING PLAN FOR NEW PIPING SIZES. SEE NEW WORK PIPING PAN FOR NEW CONDENSATE PIPING ROUTE. RE-ATTACH UNIT AND INSTALL PER CURB DETAIL.

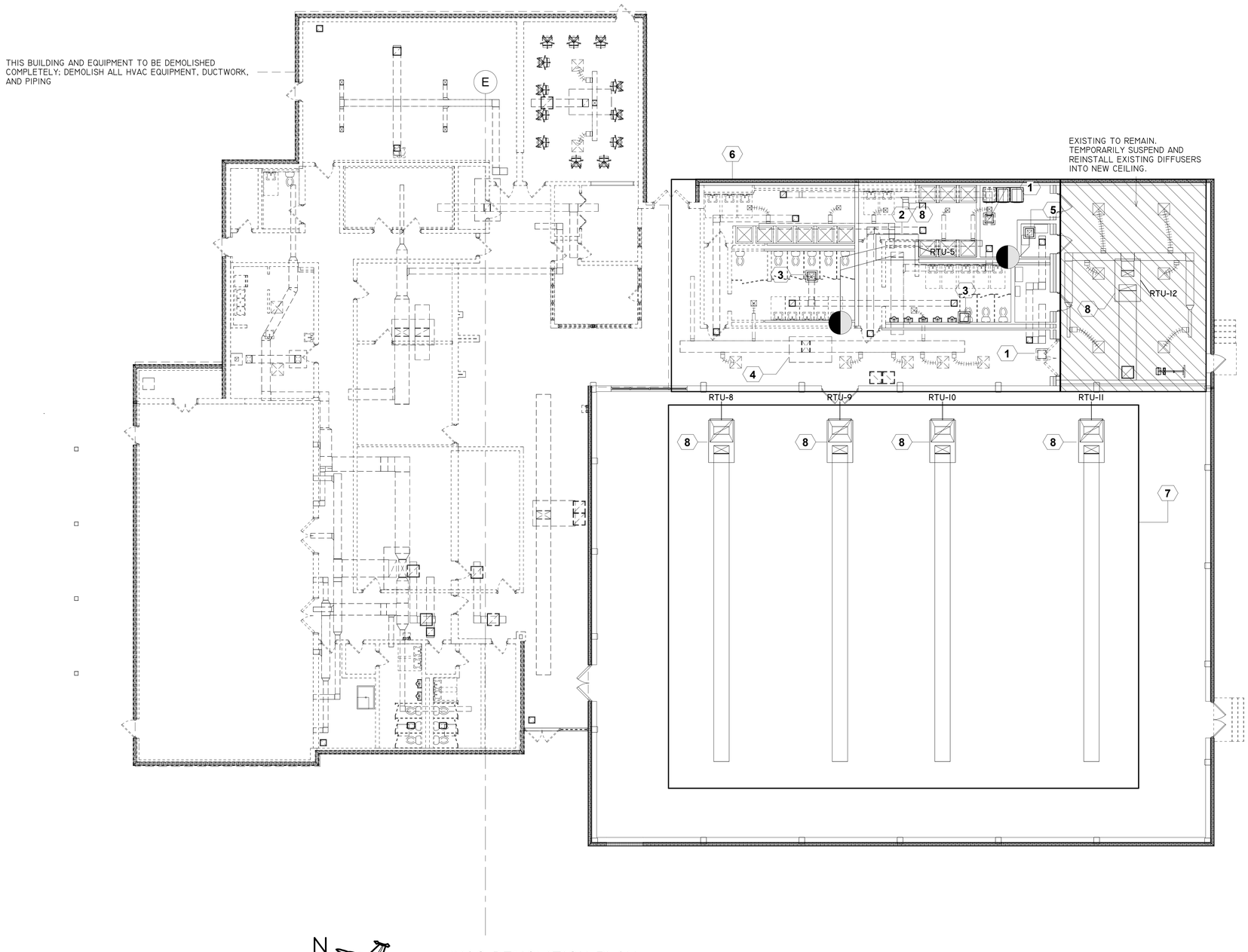

N

1 HVAC DEMOLITION PLAN

8' 0 8' 16'

SCALE: 1/8" = 1' - 0"

DocuSigned by:
1214BCEE8E745E...
DS
4/6/2026 | 14:01:32 PDT

W3 Engineering Inc.
110 E. WRIGHT ST.
PENSACOLA, FL 32502
T: (850)629-8270
F: (888)478-4898
FL P.E. #: 70595
FL AUTHORIZATION #: 31078

Printed copies of this document are not to be considered original, the original is digitally signed

GOODWYN MILLS CAWOOD, LLC.
720 Bayfront Parkway, Suite 200
Pensacola, FL 32502
T 850.432.0706
GMCNETWORK.COM
Gerald Steven Jernigan - Qualifying Agent
FL Architect AR 0009953

ISSUE	DATE
PERMIT SET	12/08/2025

DRAWN BY: ACL
CHECKED BY: JEW3

DS

JAMES E. WELLS III
LICENSE
No. 70595
STATE OF
FLORIDA
PROFESSIONAL ENGINEER

FRICKER RESOURCE CENTER RENOVATION PROJECT

900 N F St, Pensacola, FL 32501-2887

GMC # APEN250016

HVAC DEMOLITION PLAN

M1.1

4/6/2026 3:47:10 PM

SHEET NOTES

KEY #	KEYNOTE TEXT
1	26"x12" DUCT UP TO GRAVITY RELIEF VENTILATOR.
2	ROUTE EXHAUST DUCT UP TO LOW PROFILE ROOF CAP. BASIS OF DESIGN: GREENHECK GRSR-8
3	CONTRACTOR SHALL PROVIDE AND INSTALL KITCHEN HOOD, HOOD SUPRESSION SYSTEM, AND ALL ACCESSORIES. ACCEPTABLE HOOD MANUFACTURERS ARE CAPTIVEAIRE AND ACCUREX.
4	PROVIDE VANDAL RESISTANT SEIHO SFX ALUMINUM DRYER VENT TERMINATION. COORDINATE FINAL COLOR AND ELEVATION W/ ARCHITECT PRIOR TO ORDERING. BASIS OF DESIGN: SEIHO SFB6
5	PROVIDE IN-O-VATE TECHNOLOGIES DRYER BOX IN WALL FOR DRYER CONNECTION
6	PROVIDE UL705 POWER VENTILATOR IN 120V. CONTRACTOR SHALL FIELD VERIFY DRYER EXHAUST AMOUNT AND MATCH FAN FLOW TO THIS VOLUME. INTERLOCK W/ DRYER OPERATION.

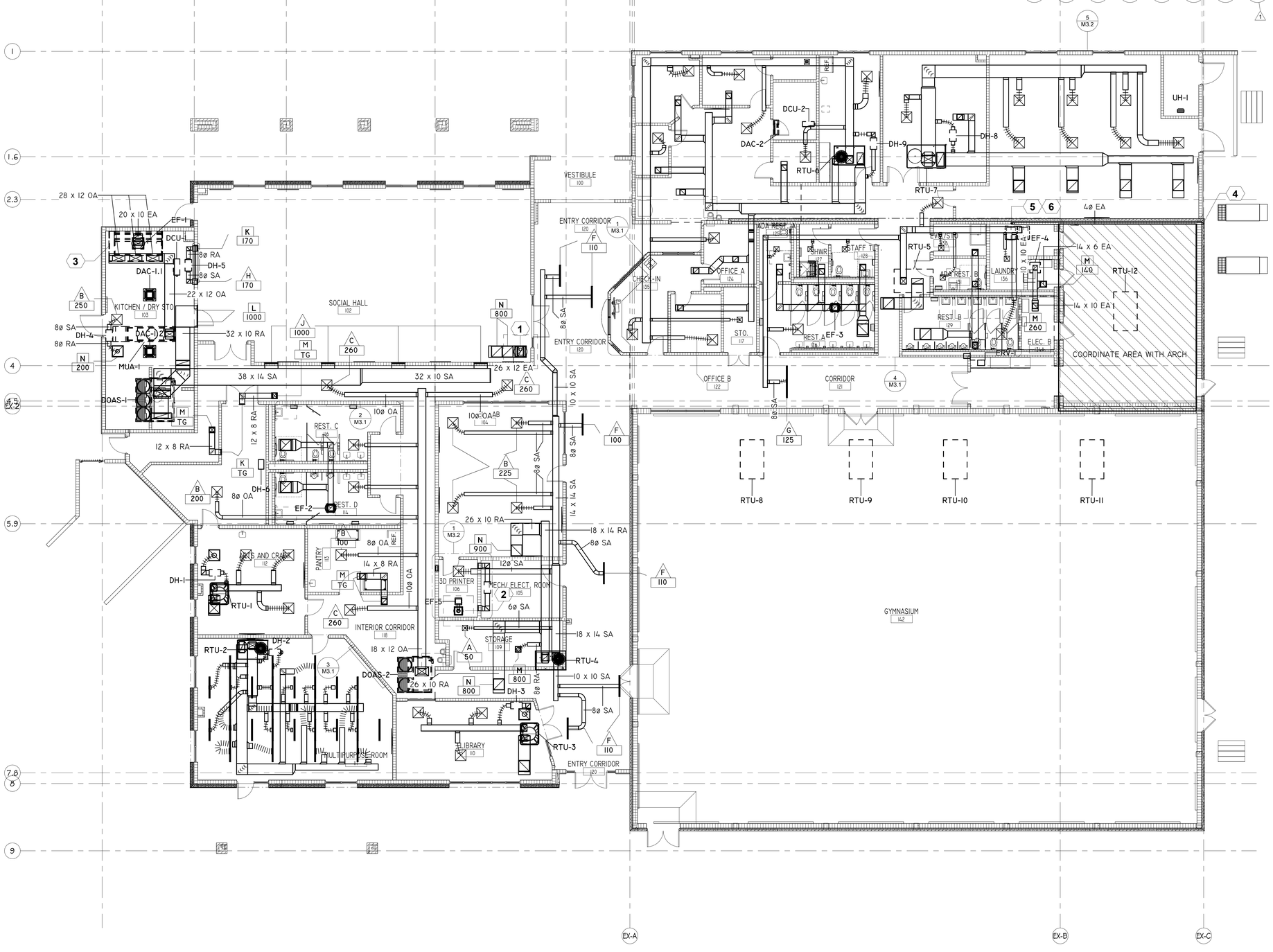

N

1 HVAC NEW WORK FLOOR PLAN

8' 0 8' 16'

SCALE: 1/8" = 1' - 0"

GMC

GOODWYN MILLS CAWOOD, LLC.
720 Bayfront Parkway, Suite 200
Pensacola, FL 32502
T 850.432.0706
GMCNETWORK.COM
Gerald Steven Jernigan - Qualifying Agent
FL Architect AR 0009953

ISSUE	DATE
PERMIT SET	12/08/2025
1 REV. 1 CODE COMMENT	4-6-26

DRAWN BY: ACL
CHECKED BY: JEW3

FRICKER RESOURCE CENTER RENOVATION PROJECT

900 N F St, Pensacola, FL 32501-2887

GMC # APEN250016

DS

JAMES E. WELLS LICENSE No. 70595 STATE OF FLORIDA PROFESSIONAL ENGINEER

HVAC NEW WORK FLOOR PLAN

M1.2

DocuSigned by:
12A4CDEB9E7A5E...
DS

4/6/2026 | 14:01:32 PDT

W3 Engineering Inc.
110 E. WRIGHT ST.
PENSACOLA, FL 32502
T: (850)629-8270
F: (888)478-4898
FL P.E. #: 70595
FL AUTHORIZATION #: 31078

Printed copies of this document are not to be considered original, the original is digitally signed

4/6/2026 3:47:16 PM

SHEET NOTES

KEY #	KEYNOTE TEXT
1	EXISTING DUCTWORK TO REMAIN. PERFORM HVAC DUCT SYSTEM CLEANING OF ALL SUPPLY AND RETURN DUCTWORK IN ACCORDANCE WITH ACR, THE NADCA STANDARD.
2	PROVIDE SEVERE DUTY ROOF CAP. BASIS OF DESIGN: GREENHECK GRSR-8
3	PROVIDE GRAVITY RELIEF DAMPER AND VENTILATOR. BASIS OF DESIGN: GREENHECK GRSR-16
4	PROVIDE AND INSTALL PERMENANT FALL PROTECTION ATTACHMENT POINT IN ACCORDANCE WITH ANSI/ASSE Z 359.1.

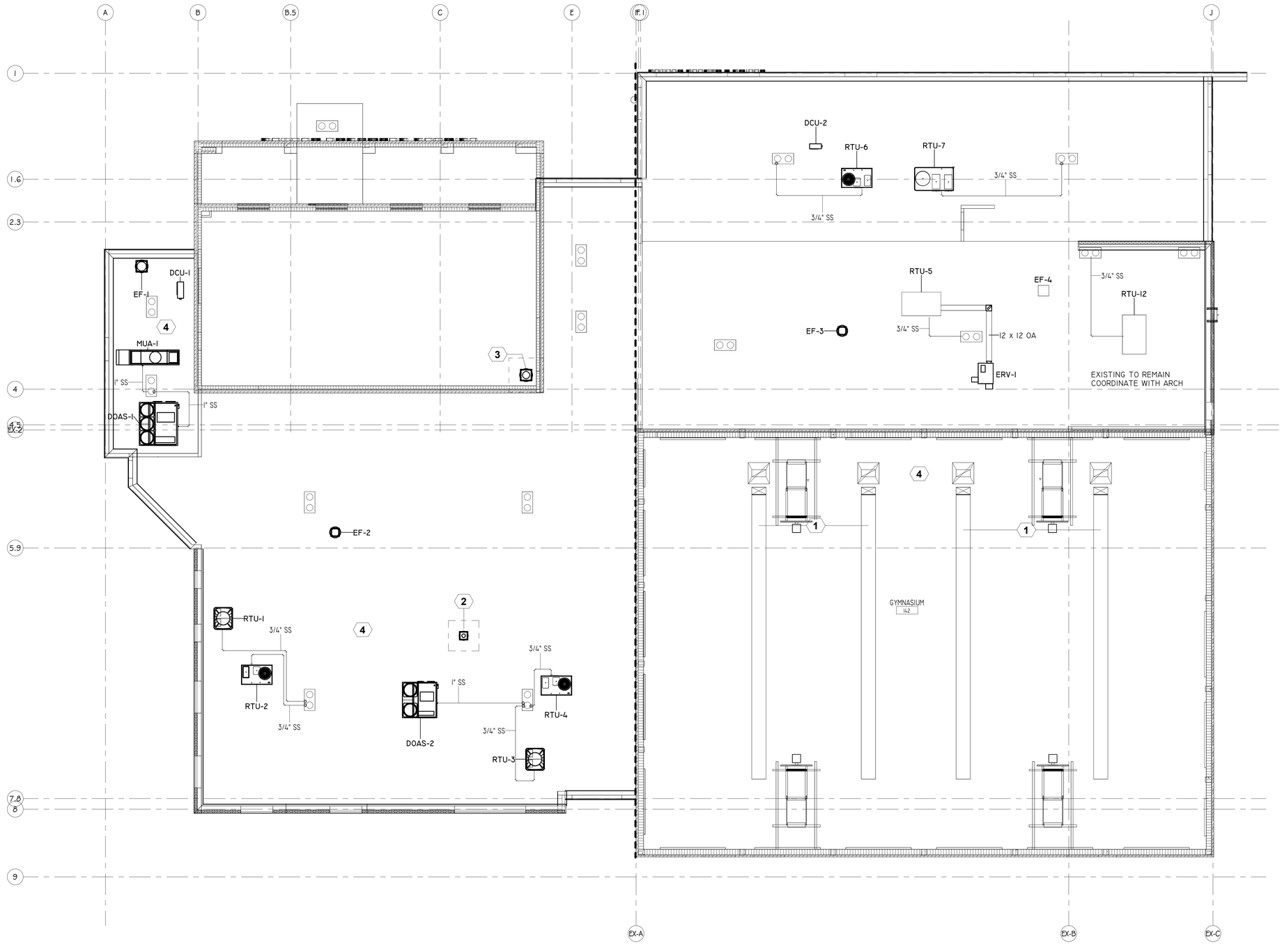

N

2 HVAC NEW WORK PLAN - LOWER ROOF

8' 0 8' 16'

SCALE: 1/8" = 1' - 0"

4/6/2026 | 14:01:32 PDT

W3 Engineering Inc.
110 E. WRIGHT ST.
PENSACOLA, FL 32502
T: (850)629-8270
F: (888)478-4898
FL P.E. #: 70595
FL AUTHORIZATION #: 31078

Printed copies of this document are not to be considered original, the original is digitally signed

GMC

GOODWYN MILLS CAWOOD, LLC.
720 Bayfront Parkway, Suite 200
Pensacola, FL 32502
T 850.432.0706
GMCNETWORK.COM
Gerald Steven Jernigan - Qualifying Agent
FL Architect AR 0009953

ISSUE	DATE
PERMIT SET	12/08/2025

DRAWN BY: ACL
CHECKED BY: JEW3

FRICKER RESOURCE CENTER RENOVATION PROJECT
900 N F St, Pensacola, FL 32501-2887

GMC # APEN250016

DS

JAMES E. WELLS III LICENSED PROFESSIONAL ENGINEER No. 70595 STATE OF FLORIDA

HVAC NEW WORK LOWER ROOF PLAN

M1.3

4/6/2026 3:47:25 PM

SHEET NOTES

KEY #	KEYNOTE TEXT
1	EXISTING RTU SHALL BE REMOVED, STORED, AND REINSTALLED WITH NEW CURB. DEMOLISH GAS PIPING AND PROVIDE NEW GAS PIPING AND REGULATOR. DEMOLISH EXISTING CONDENSATE PIPING AND PROVIDE NEW CONDENSATE PIPING. SEE PLUMBING GAS PIPING PLAN FOR NEW PIPING SIZES. SEE NEW WORK PIPING PAN FOR NEW CONDENSATE PIPING ROUTE. RE-ATTACH UNIT AND INSTALL PER CURB DETAIL.
2	PROVIDE AND INSTALL PERMENANT FALL PROTECTION ATTACHMENT POINT IN ACCORDANCE WITH ANSI/ASSE Z 359.1.

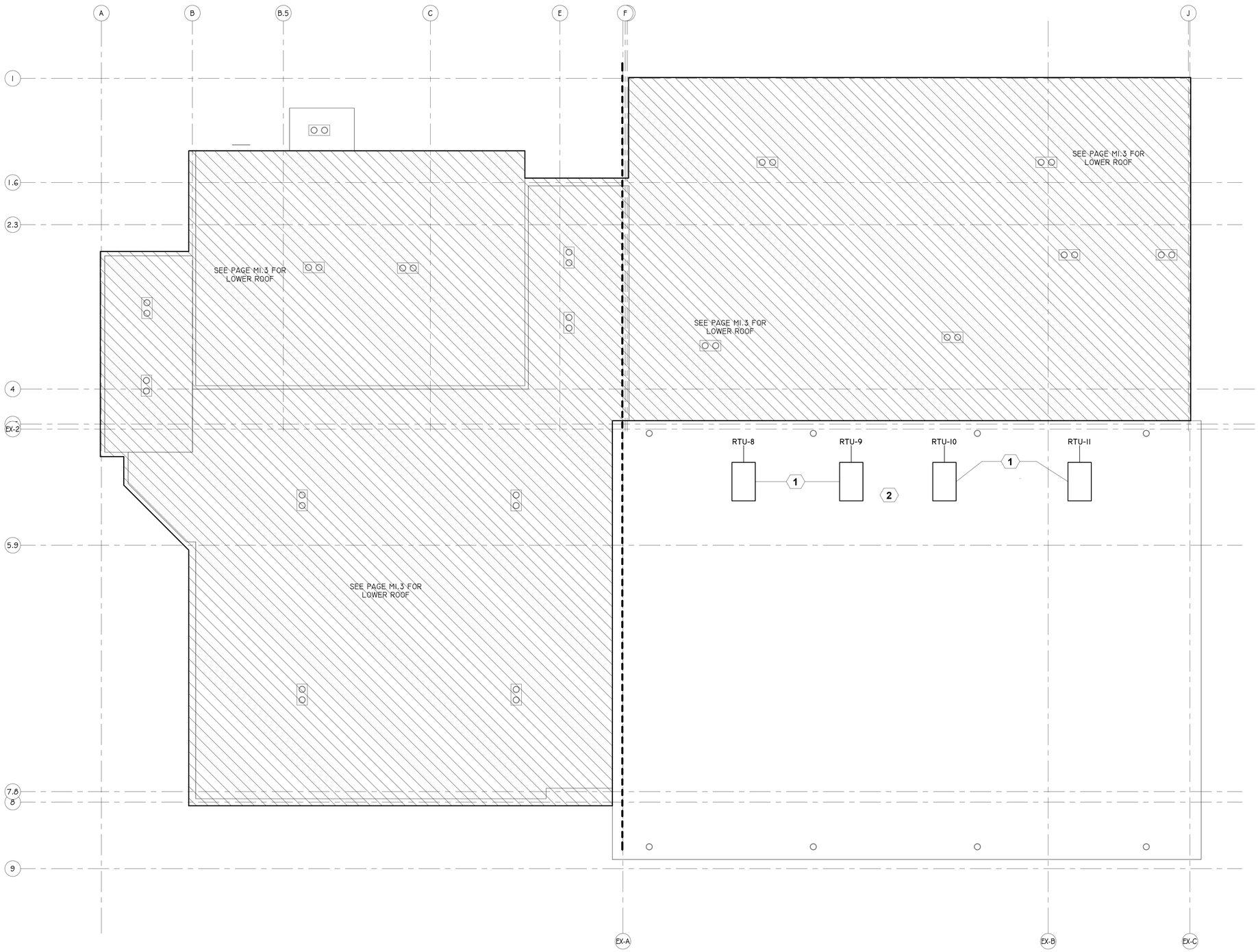

N

2 HVAC NEW WORK PLAN - UPPER ROOF

8' 0 8' 16'

SCALE: 1/8" = 1' - 0"

DocuSigned by:
1D54BCEE86E745E...
DS
4/6/2026 | 14:01:32 PDT

W3 Engineering Inc.
110 E. WRIGHT ST.
PENSACOLA, FL 32502
T: (850)629-8270
F: (888)478-4898
FL P.E. #: 70595
FL AUTHORIZATION #: 31078

Printed copies of this document are not to be considered original, the original is digitally signed

GMC

GOODWYN MILLS CAWOOD, LLC.
720 Bayfront Parkway, Suite 200
Pensacola, FL 32502
T 850.432.0706
GMCNETWORK.COM
Gerald Steven Jernigan - Qualifying Agent
FL Architect AR 0009953

ISSUE	DATE
PERMIT SET	12/08/2025

DRAWN BY: ACL
CHECKED BY: JEW3

FRICKER RESOURCE CENTER RENOVATION PROJECT

900 N F St, Pensacola, FL 32501-2887

GMC # APEN250016

DS

JAMES E. WELLS III
LICENSE
No. 70595
STATE OF
FLORIDA
PROFESSIONAL ENGINEER

HVAC NEW WORK UPPER ROOF PLAN

M1.4

4/6/2026 3:47:31 PM

SHEET NOTES

KEY #	KEYNOTE TEXT
1	PROVIDE 120V BLUE DIAMOND CONDENSATE PUMP. ROUTE CONDENSATE PIPING TO FLOOR DRAIN IN MECHANICAL ROOM
2	SIZE REFRIGERANT LINESET PER MANUFACTURERS RECOMMENDATIONS
3	PROVIDE 120V BLUE DIAMOND CONDENSATE PUMP. ROUTE CONDENSATE PIPING TO EXTERIOIR
4	PROVIDE CONCRETE SPLASH BLOCK FOR CONDENSATE
5	ROUTE CONDENSATE PIPING TO FLOOR SNK UNDER 3-COMPARTMENT SINK.

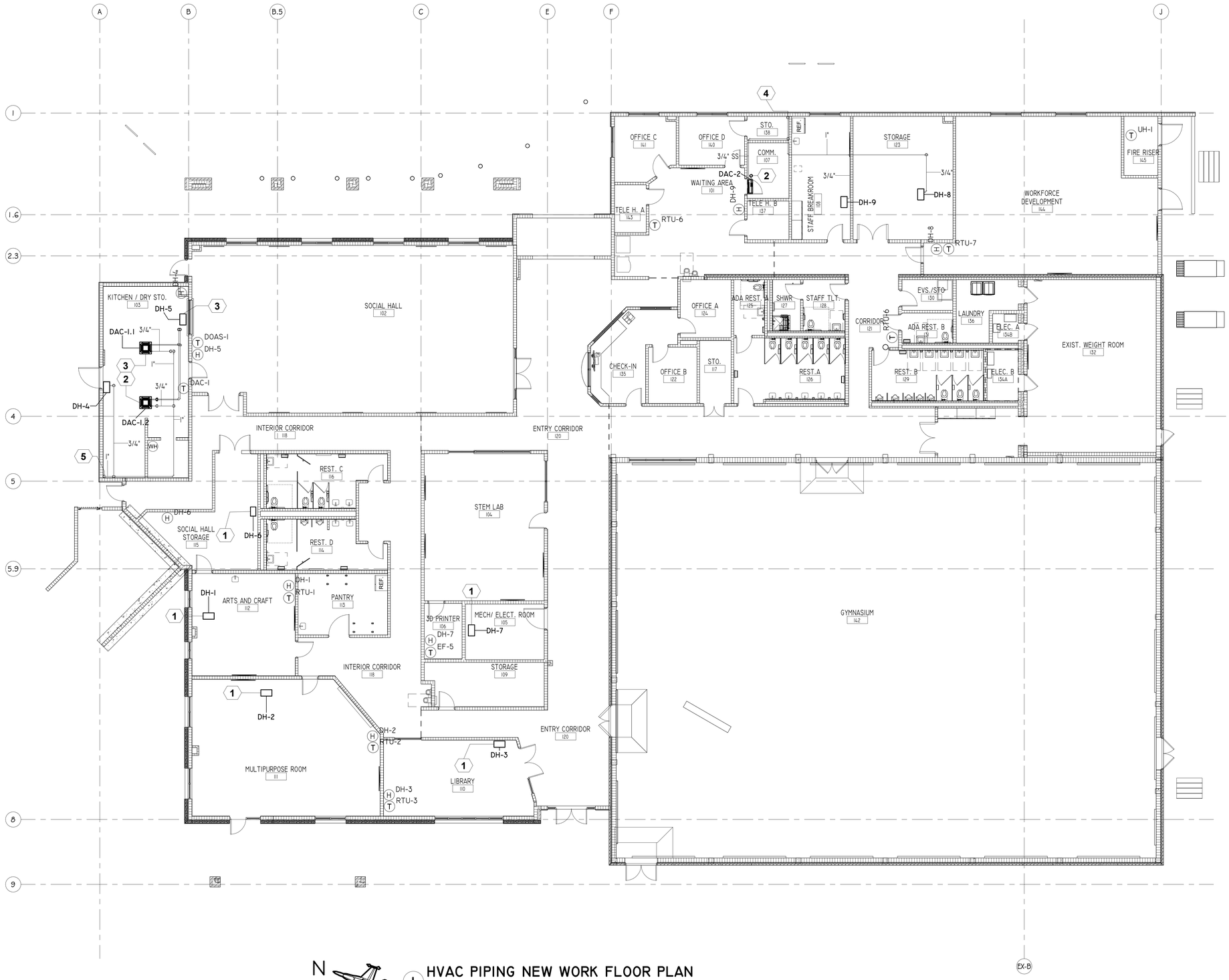

N

I HVAC PIPING NEW WORK FLOOR PLAN

8' 0 8' 16'

SCALE: 1/8" = 1' - 0"

4/6/2026 | 14:01:32 PDT

W3 Engineering Inc.
110 E. WRIGHT ST.
PENSACOLA, FL 32502
T: (850)629-8270
F: (888)478-4898
FL P.E. #: 70595
FL AUTHORIZATION #: 31078

Printed copies of this document are not to be considered original, the original is digitally signed

GMC

GOODWYN MILLS CAWOOD, LLC.
720 Bayfront Parkway, Suite 200
Pensacola, FL 32502
T 850.432.0706
GMCNETWORK.COM
Gerald Steven Jernigan - Qualifying Agent
FL Architect AR 0009953

ISSUE	DATE
PERMIT SET	12/08/2025

DRAWN BY: ACL
CHECKED BY: JEW3

FRICKER RESOURCE CENTER RENOVATION PROJECT
900 N F St, Pensacola, FL 32501-2887
GMC # APEN250016

DS

JAMES E. WEIGLE III
No. 70595
STATE OF FLORIDA
PROFESSIONAL ENGINEER

HVAC NEW WORK PIPING PLAN

M2.1

4/6/2026 3:47:38 PM

SHEET NOTES

KEY #	KEYNOTE TEXT
	PROVIDE BREAK METAL SHEATHING OVER PIPING. PAINT TO MATCH BUILDING
1	ROUTE CONDENSATE TO NEAREST ROOF DRAIN
2	SIZE REFRIGERANT LINESET PER MANUFACTURERS RECOMMENDATIONS
3	PROVIDE PRE-MANUFACTURED ROOF CURB REFRIGERANT CHASE. BASIS OF DESIGN: SBC LINE SHACK
4	PROVIDE SUPPORT FOR CONDENSATE PIPING PER DETAIL. SUPPORT SPACING SHOULD BE PER FLORIDA PLUMBING CODE TABLE 308.5.
5	PROVIDE BREAK METAL SHEATHING OVER PIPING. PAINT TO MATCH BUILDING

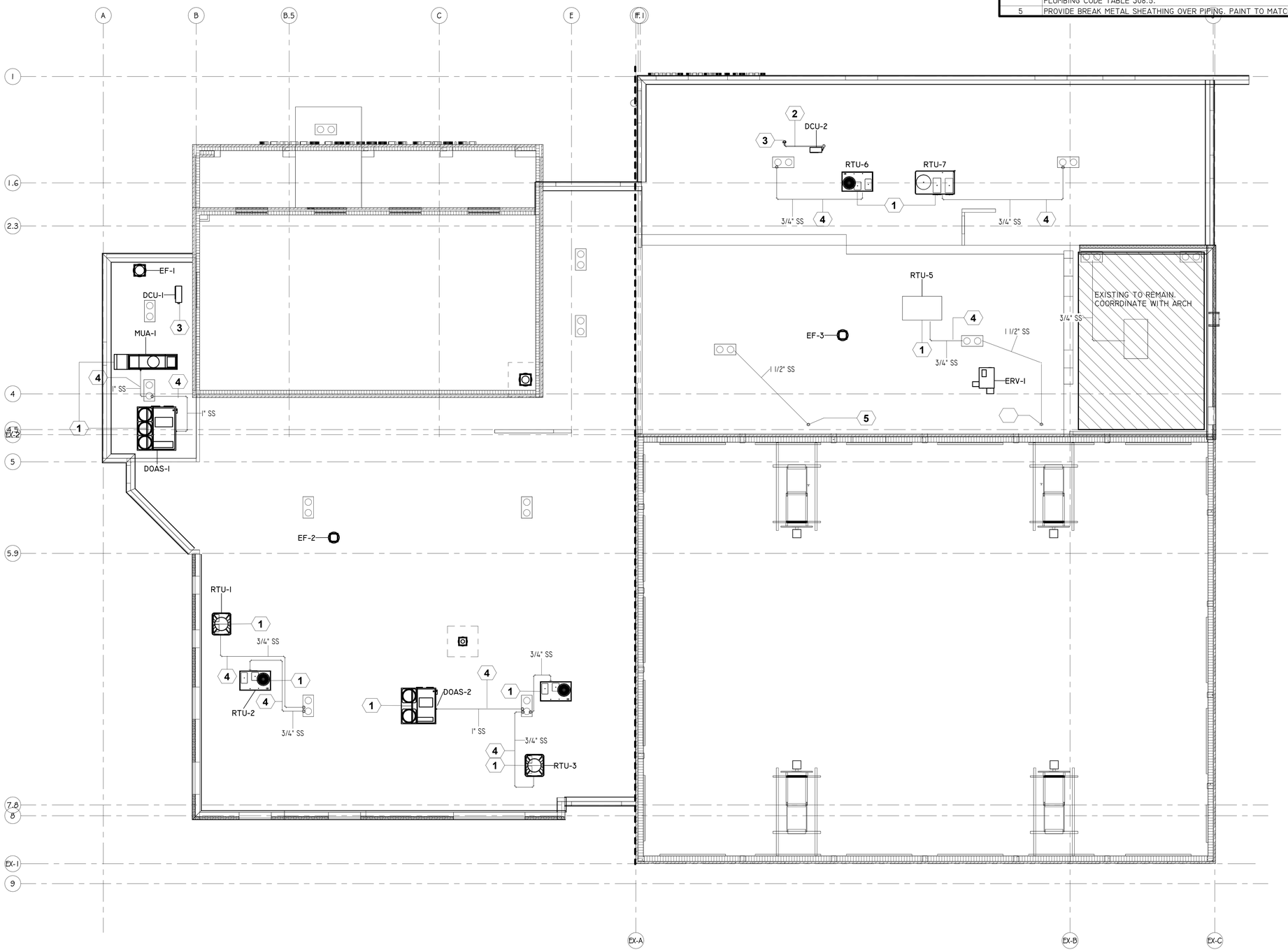

N

1 HVAC PIPING NEW WORK PLAN - LOWER ROOF

8' 0 8' 16'

SCALE: 1/8" = 1' - 0"

GOODWYN MILLS CAWOOD, LLC.
720 Bayfront Parkway, Suite 200
Pensacola, FL 32502
T 850.432.0706
GMCNETWORK.COM
Gerald Steven Jernigan - Qualifying Agent
FL Architect AR 0009953

ISSUE	DATE
PERMIT SET	12/08/2025

DRAWN BY: ACL
CHECKED BY: JEW3

FRICKER RESOURCE CENTER RENOVATION PROJECT

900 N F St, Pensacola, FL 32501-2887

GMC # APEN250016

DS

JAMES E. WELLS III LICENSED No. 70595 STATE OF FLORIDA PROFESSIONAL ENGINEER

Docusigned by:
1D14BCEE8BE745E...
DS
4/6/2026 | 14:01:32 PDT

W3 Engineering Inc.
110 E. WRIGHT ST.
PENSACOLA, FL 32502
T: (850)629-8270
F: (888)478-4898
FL P.E. #: 70595
FL AUTHORIZATION #: 31078

HVAC NEW WORK LOWER ROOF PIPING PLAN

M2.2

Printed copies of this document are not to be considered original, the original is digitally signed

4/6/2026 3:47:45 PM

SHEET NOTES

KEY #	KEYNOTE TEXT
1	ROUTE CONDENSATE TO NEAREST ROOF DRAIN
2	PROVIDE BREAK METAL SHEATHING OVER PIPING. PAINT TO MATCH BUILDING

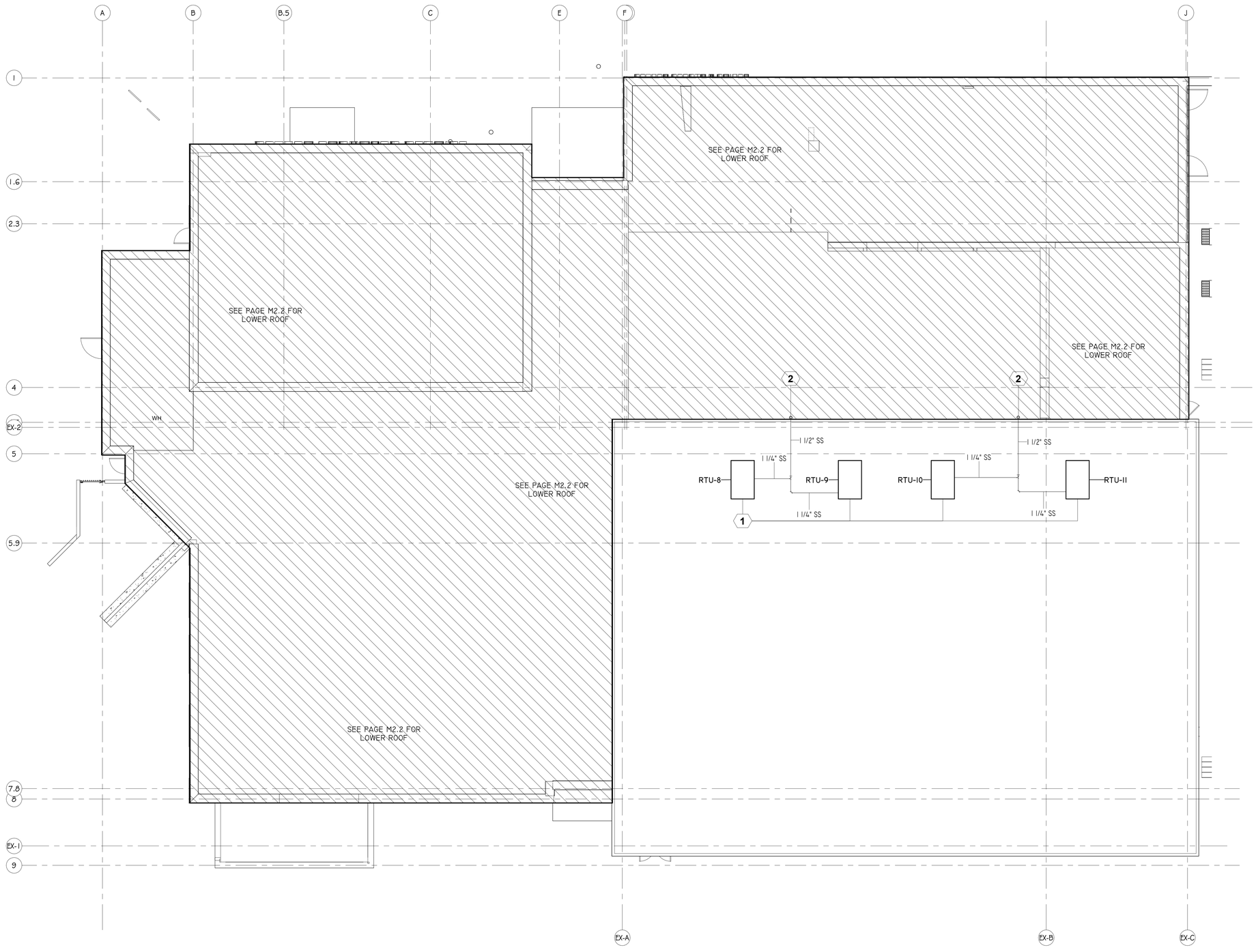

N

1 HVAC PIPING NEW WORK PLAN - UPPER ROOF

8' 0 8' 16'

SCALE: 1/8" = 1' - 0"

DocuSigned by:
10140CEE86E745E...
DS
4/6/2026 | 14:01:32 PDT

W3 Engineering Inc.
110 E. WRIGHT ST.
PENSACOLA, FL 32502
T: (850)629-8270
F: (888)478-4898
FL P.E. #: 70595
FL AUTHORIZATION #: 31078

Printed copies of this document are not to be considered original, the original is digitally signed

GMC

GOODWYN MILLS CAWOOD, LLC.
720 Bayfront Parkway, Suite 200
Pensacola, FL 32502
T 850.432.0706
GMCNETWORK.COM
Gerald Steven Jernigan -
Qualifying Agent
FL Architect AR 0009953

ISSUE	DATE
PERMIT SET	12/08/2025

DRAWN BY: ACL
CHECKED BY: JEW3

FRICKER RESOURCE CENTER RENOVATION PROJECT

900 N F St, Pensacola, FL 32501-2887

GMC # APEN250016

DS

JAMES E. WELLS
No. 70595
STATE OF FLORIDA
PROFESSIONAL ENGINEER

HVAC NEW WORK UPPER ROOF PIPING PLAN

M2.3

4/6/2026 3:47:53 PM

SHEET NOTES

KEY #	KEYNOTE TEXT
1	PROVIDE TITUS T-3 DIFFUSER CONTROLLED BY LOCAL THERMOSTAT AS INDICATED
2	PROVIDE IN-O-VATE TECHNOLOGIES DRYER BOX IN WALL FOR DRYER CONNECTION
3	PROVIDE UL705 POWER VENTILATOR IN 120V. CONTRACTOR SHALL FIELD VERIFY DRYER EXHAUST AMOUNT AND MATCH FAN FLOW TO THIS VOLUME. INTERLOCK W/ DRYER OPERATION.

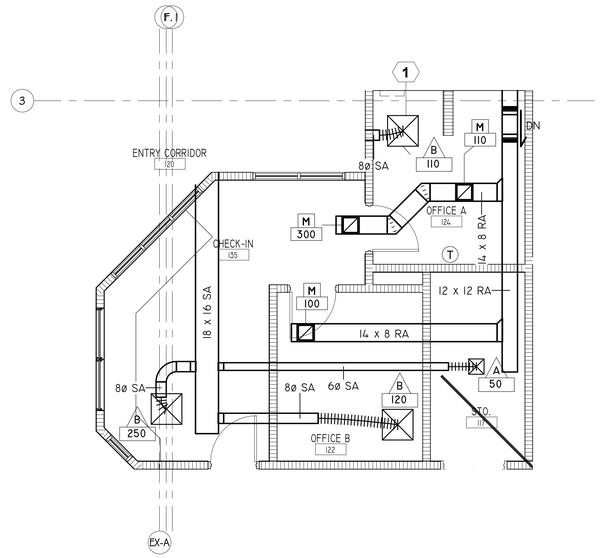

1 HVAC - ENLARGED CHECK-IN

SCALE: 1/4" = 1' - 0"

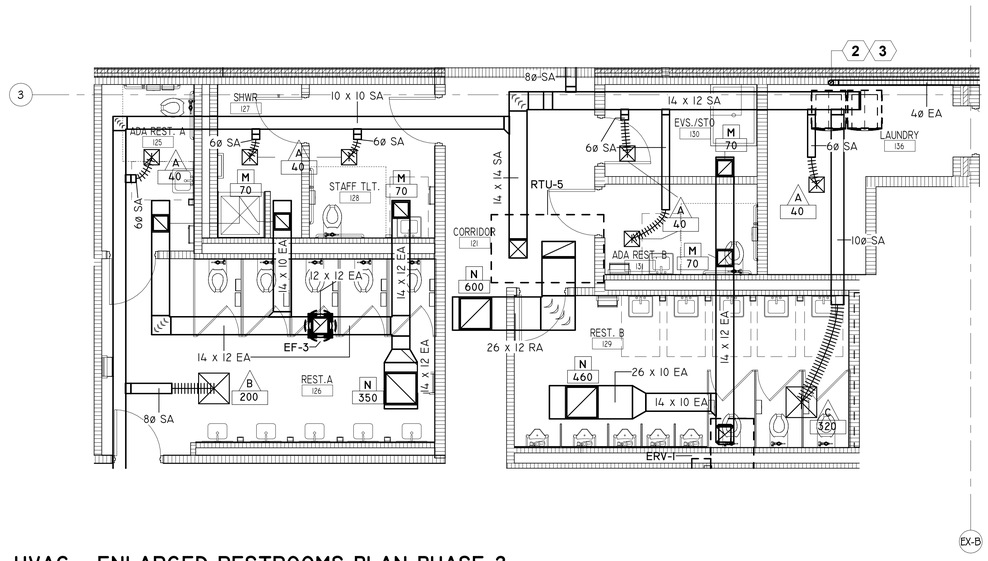

4 HVAC - ENLARGED RESTROOMS PLAN PHASE 2

SCALE: 1/4" = 1' - 0"

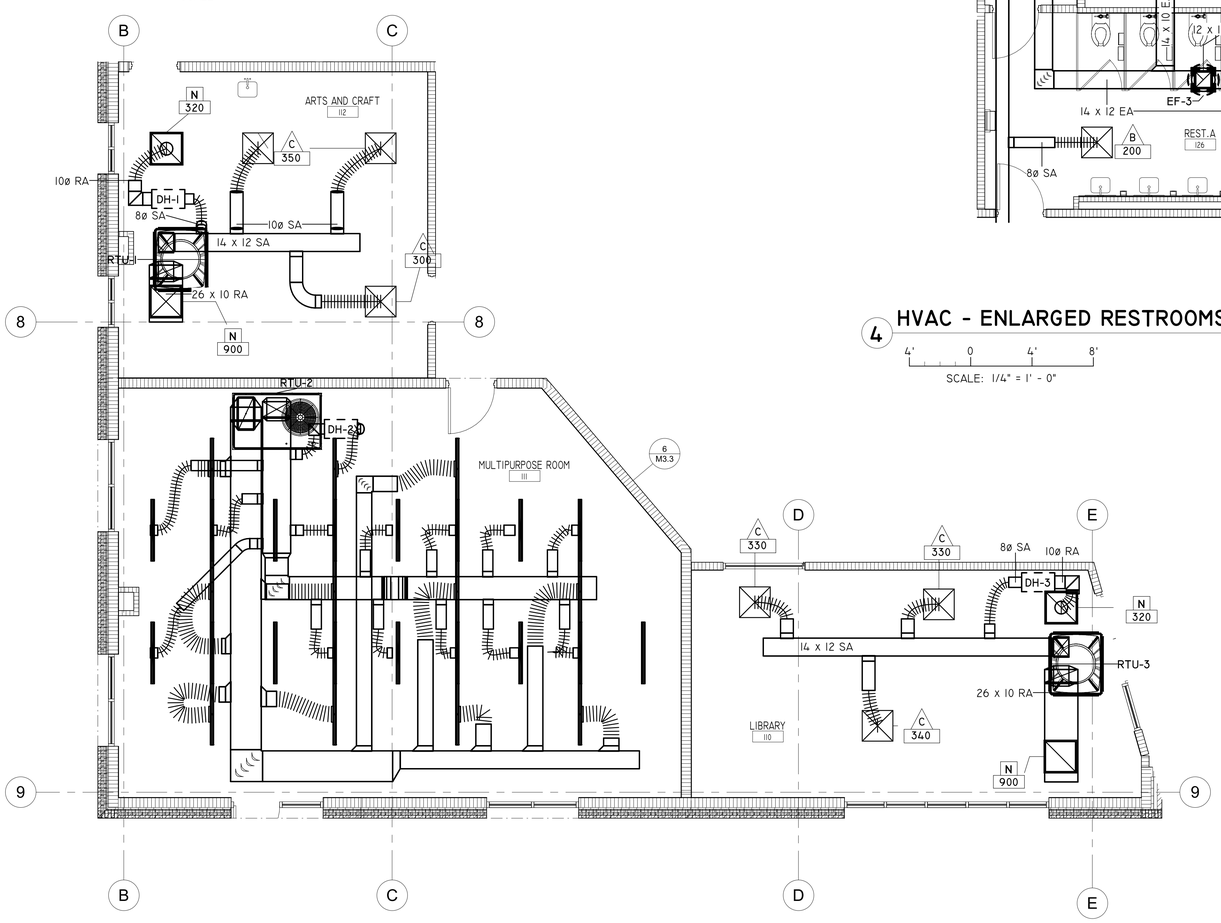

3 HVAC - ENLARGED COMMUNITY ROOMS

SCALE: 1/4" = 1' - 0"

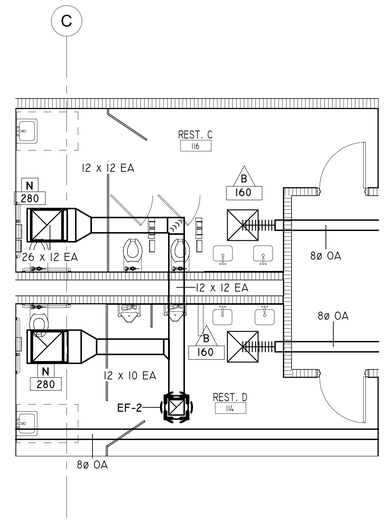

2 HVAC - ENLARGED RESTROOMS PLAN PHASE 1

SCALE: 1/4" = 1' - 0"

Printed copies of this document are not to be considered original, the original is digitally signed

GMC

GOODWYN MILLS CAWOOD, LLC.
720 Bayfront Parkway, Suite 200
Pensacola, FL 32502
T 850.432.0706
GMCNETWORK.COM
Gerald Steven Jernigan - Owner/Principal Officer
FL Architect AR 0009953

ISSUE	DATE
PERMIT SET	12/08/2025
1 REV. 1 CODE COMMENT	4-6-26

DRAWN BY: ACL
CHECKED BY: JEW3

FRICKER RESOURCE CENTER RENOVATION PROJECT
900 N F St, Pensacola, FL 32501-2887
GMC # APEN250016

DS

JOSHUA E. WELLS LICENSE No. 70595 STATE OF FLORIDA PROFESSIONAL ENGINEER

DocuSigned by: 1D14BCEE8E87416...
DS
4/6/2026 | 14:01:32 PDT

W3 Engineering Inc.
110 E. WRIGHT ST.
PENSACOLA, FL 32502
T: (850)629-8270
F: (888)478-4898
FL P.E. #: 70595
FL AUTHORIZATION #: 31078

ENLARGED FLOOR PLANS

M3.1

4/6/2026 3:47:55 PM

SHEET NOTES

KEY #	KEYNOTE TEXT
1	ROUTE EXHAUST DUCT UP TO LOW PROFILE ROOF CAP. BASIS OF DESIGN: GREENHECK GRSR-8
2	INSTALL SIDEWALL TRANSFER AIR FILTER GRILLES NO LESS THAN 8" FROM FINISH FLOOR TO BOTTOM EDGE OF GRILLE FRAME. COORDINATE FINAL COLOR AND ELEVATION W/ ARCHITECT PRIOR TO INSTALATION.

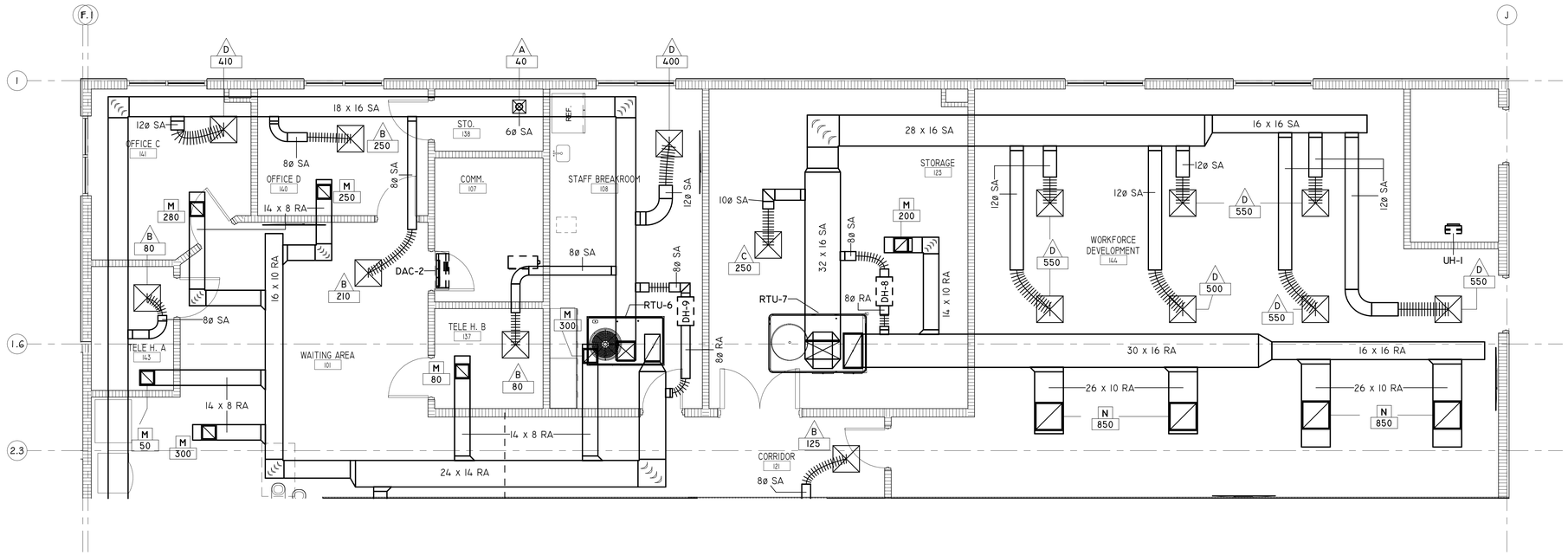

N

5 HVAC - ENLARGED WORKFORCE DEVELOPMENT

SCALE: 1/4" = 1' - 0"

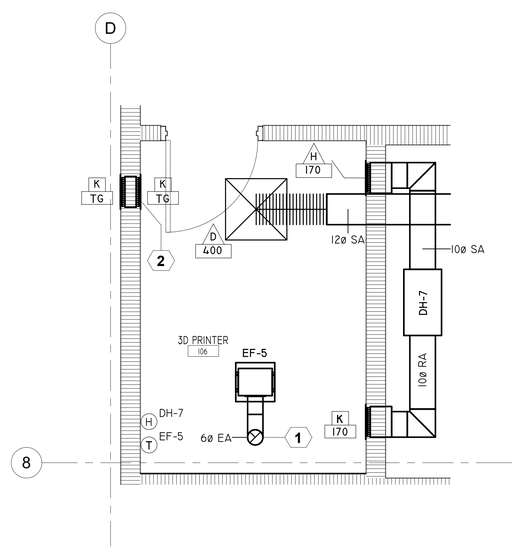

1 HVAC - ENLARGED 3D PRINT ROOM

SCALE: 1/4" = 1' - 0"

GOODWYN MILLS CAWOOD, LLC.
720 Bayfront Parkway, Suite 200
Pensacola, FL 32502
T 850.432.0706
GMCNETWORK.COM
Gerald Steven Jernigan - Qualifying Agent
FL Architect AR 0009953

ISSUE	DATE
PERMIT SET	12/08/2025

DRAWN BY: Author
CHECKED BY: Checker

FRICKER RESOURCE CENTER RENOVATION PROJECT

900 N F St, Pensacola, FL 32501-2887

GMC # APEN250016

DS

JAMES E. WELSH LICENSED No. 70595 STATE OF FLORIDA PROFESSIONAL ENGINEER

DocuSigned by:
10140CEE86E745E...
DS
4/6/2026 | 14:01:32 PDT

ENLARGED FLOOR PLANS

M3.2

W3 Engineering Inc.
110 E. WRIGHT ST.
PENSACOLA, FL 32502
T: (850)629-8270
F: (888)478-4898
FL P.E. #: 70595
FL AUTHORIZATION #: 31078

Printed copies of this document are not to be considered original, the original is digitally signed

4/6/2026 3:48:03 PM

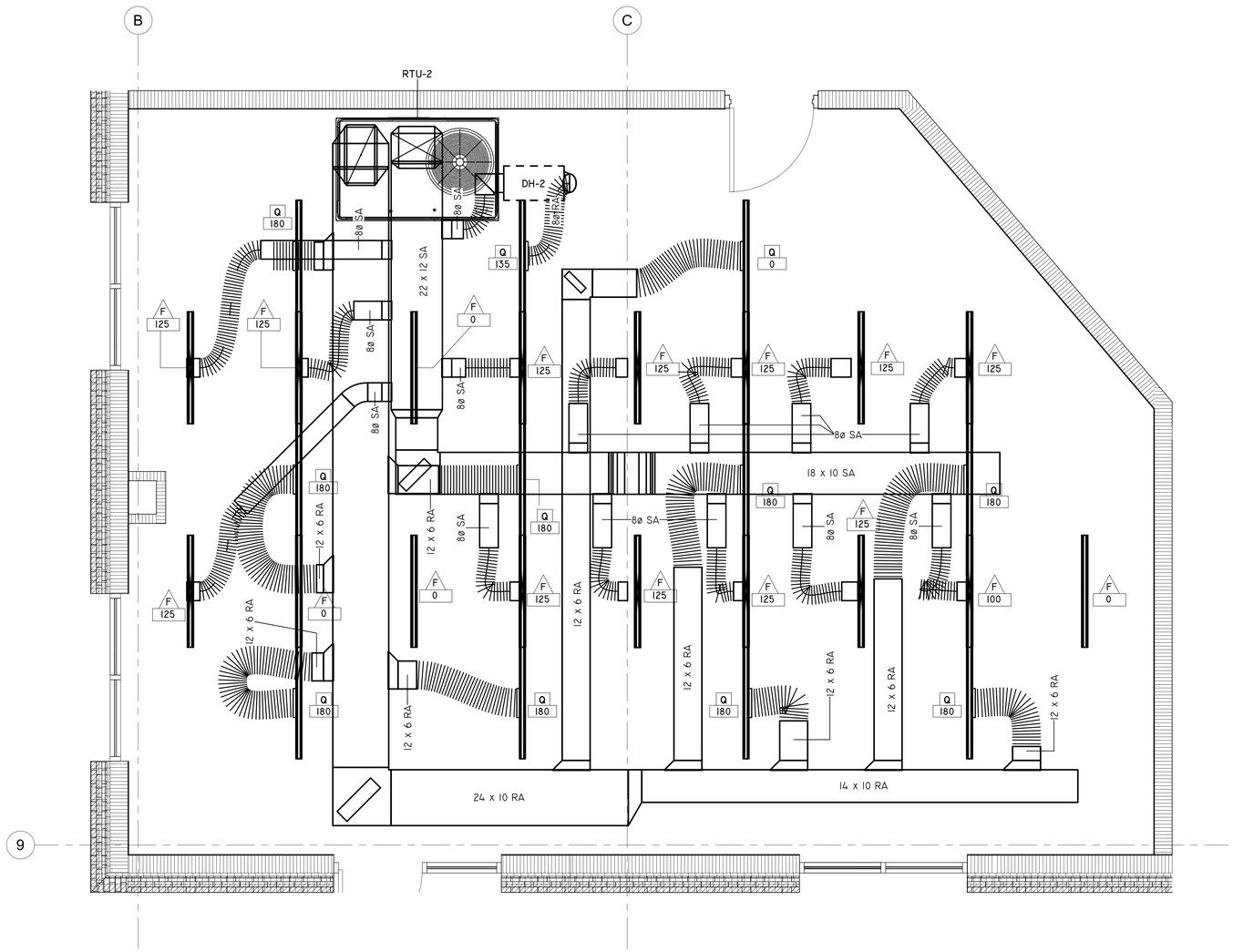

6 HVAC - ENLARGED MULTIPURPOSE ROOM

N

2' 0 2' 4'

SCALE: 1/2" = 1' - 0"

4/6/2026 3:48:09 PM

DocuSigned by:
10146CEE8E745E...
DS
4/6/2026 | 14:01:32 PDT

W3 Engineering Inc.
110 E. WRIGHT ST.
PENSACOLA, FL 32502
T: (850)629-8270
F: (888)478-4898
FL P.E. #: 70595
FL AUTHORIZATION #: 31078

Printed copies of this document are not to be considered original, the original is digitally signed

GMC

GOODWYN MILLS CAWOOD, LLC.
720 Bayfront Parkway, Suite 200
Pensacola, FL 32502
T 850.432.0706
GMCNETWORK.COM
Gerald Steven Jernigan -
Qualifying Agent
FL Architect AR 0009953

ISSUE	DATE
PERMIT SET	12/08/2025

DRAWN BY: Author
CHECKED BY: Checker

FRICKER RESOURCE CENTER RENOVATION PROJECT

900 N F St, Pensacola, FL 32501-2887

GMC # APEN250016

DS

JAMES E. WELLS III
LICENSED
No. 70595
STATE OF
FLORIDA
PROFESSIONAL ENGINEER

ENLARGED FLOOR PLANS

M3.3

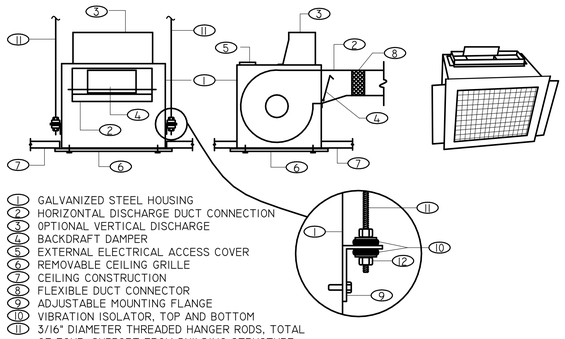

CEILING EXHAUST FAN DETAIL

NOT TO SCALE

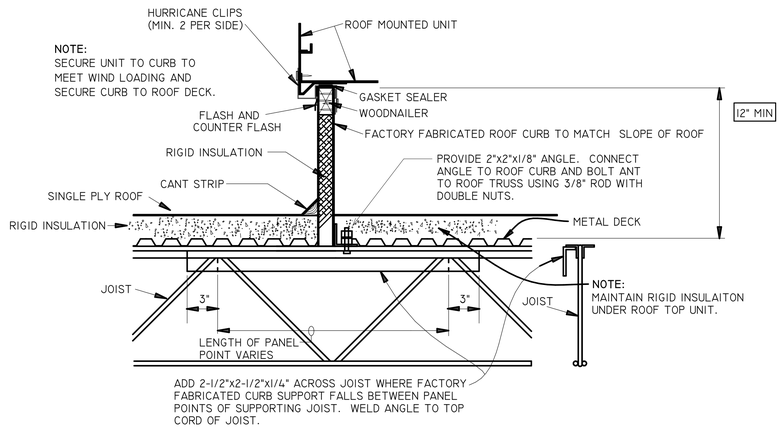

ROOF CURB DETAIL

NOT TO SCALE

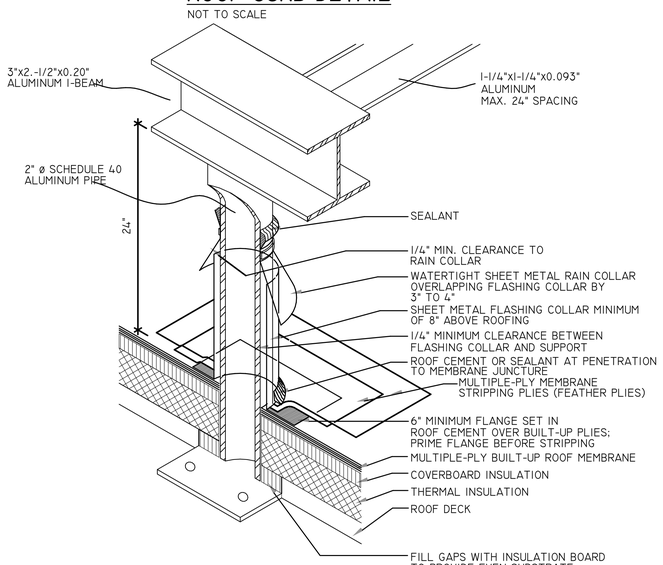

NOTE:
ANCHOR CONDENSING UNIT TO BASE RAILS AT 4 MANF. PROVIDED LOCATIONS W/ 3/8"x1-1/4" STAINLESS BOLT, NUT, & 1" WASHER.
WRAP UNIT AND TOP RAIL WITH 22 GA. HURRICANE STRAP AT TWO LOCATIONS.
UNIT SHALL BE FASTENED TO UNIT STAND IN ACCORDANCE WITH FLORIDA MECHANICAL CODE 301.15

ROOF MOUNT CONDENSING UNIT STAND

NOT TO SCALE

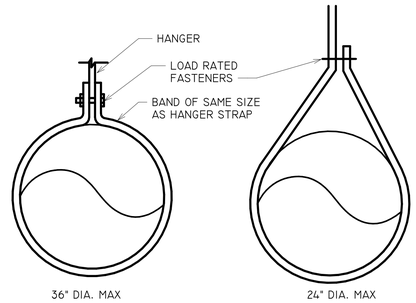

MINIMUM HANGER SIZE FOR ROUND DUCT				
DIA	MAX SPACING	WIRE DIA.	ROD	STRAP
10" DN	12'	ONE 12 GA.	1/4"	1" X 22 GA.
11-18"	12'	TWO 12 GA. OR ONE 8 GA.	1/4"	1" X 22 GA.
19-24"	12'	TWO 10 GA.	1/4"	1" X 22 GA.
25-36"	12'	TWO 8 GA.	3/8"	1" X 20 GA.
37-50"	12'		TWO 3/8"	TWO 1" X 20 GA.
51-60"	12'		TWO 3/8"	TWO 1" X 18 GA.
61-84"	12'		TWO 3/8"	TWO 1" X 16 GA.

NOTES:
STRAPS ARE GALVANIZED STEEL; RODS ARE UNCOATED OR GALVANIZED STEEL;
WIRE IS BLACK ANNEALED, BRIGHT BASIC, OR GALVANIZED STEEL. ALL ARE ALTERNATES.
TABLE ALLOWS FOR CONVENTIONAL WALL THICKNESSES, AND JOINT SYSTEMS PLUS ONE LB/SF
INSULATION WEIGHT. IF HEAVIER DUCTS ARE TO BE INSTALLED, ADJUST HANGERS TO BE WITHIN
THEIR LIMITED LOAD. SEE DUCT HANGER DETAIL. HANGER SPACING MAY BE ADJUSTED BY SPECIAL
ANALYSIS.

ROUND DUCT SUPPORT DETAIL

NOT TO SCALE

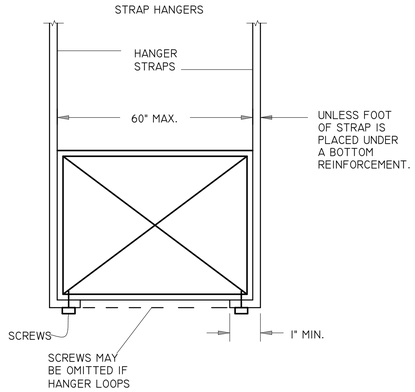

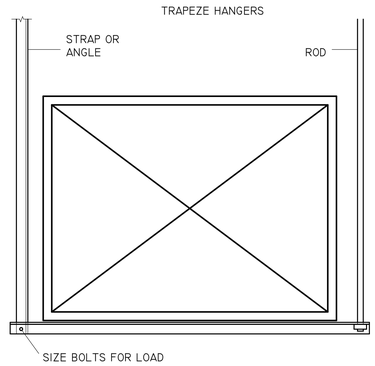

RECTANGULAR DUCT HANGERS MINIMUM SIZE								
MAXIMUM HALF OF DUCT PERIMETER	PAIR AT 10FT SPACING		PAIR AT 8FT SPACING		PAIR AT 5FT SPACING		PAIR AT 4FT SPACING	
	STRAP	WIRE/ROD	STRAP	WIRE/ROD	STRAP	WIRE/ROD	STRAP	WIRE/ROD
P/2 = 30"	1" X 22 GA.	10 GA.	1" X 22 GA.	10 GA.	1" X 22 GA.	12 GA.	1" X 22 GA.	12 GA.
P/2 = 72"	1" X 18 GA.	3/8"	1" X 20 GA.	1/4"	1" X 22 GA.	1/4"	1" X 22 GA.	1/4"
P/2 = 96"	1" X 16 GA.	3/8"	1" X 18 GA.	3/8"	1" X 20 GA.	3/8"	1" X 22 GA.	1/4"
P/2 = 120"	1 1/2" X 16 GA.	1/2"	1" X 16 GA.	3/8"	1" X 18 GA.	3/8"	1" X 20 GA.	1/4"
P/2 = 168"	1 1/2" X 16 GA.	1/2"	1 1/2" X 16 GA.	1/2"	1" X 16 GA.	3/8"	1" X 18 GA.	3/8"
P/2 = 192"	NOT GIVEN	1/2"	1 1/2" X 16 GA.	1/2"	1" X 16 GA.	3/8"	1" X 16 GA.	3/8"
P/2 = 193" UP	SPECIAL ANALYSIS REQUIRED.							

WHEN STRAPS ARE LAP JOINED USE THESE MINIMUM FASTENERS.	SINGLE HANGER MAXIMUM ALLOWABLE LOAD	
	STRAP	WIRE OR ROD (DIA.)
1" X 18, 20, 22 GA. -TWO #10 OR ONE 1/4" BOLT	1" X 22 GA. - 260 LB.	0.106" - 80 LB.
1" X 16 GA. -TWO 1/4" DIA.	1" X 20 GA. - 320 LB.	0.135" - 120 LB.
1 1/2" 16GA. -TWO 3/8" DIA.	1" X 18 GA. - 420 LB.	0.162" - 160 LB.
PLACE FASTENERS IN SERIES, NOT SIDE BY SIDE.	1" X 16 GA. - 700 LB.	1/4" - 270 LB.
	1 1/2" X 16 GA. - 1100 LB.	3/8" - 680 LB.
		1/2" - 1250 LB.
		5/8" - 2000 LB.
		3/4" - 3000 LB.

NOTES:
DIMENSIONS OTHER THAN GAGE ARE IN INCHES.
TABLES ALLOW FOR DUCT WEIGHT, 1LB./SF INSULATION WEIGHT AND NORMAL REINFORCEMENT AND TRAPEZE WEIGHT BUT NO EXTERNAL LOADS FOR CUSTOM DESIGN OF HANGERS, DESIGNERS MAY CONSULT SMACNA'S RECTANGULAR INDUSTRIAL DUCT STANDARDS.
STRAPS ARE GALVANIZED STEEL. ALL OTHER MATERIALS ARE UNCOATED STEEL.
ALLOWABLE LOADS FOR P/2 ASSUME THAT DUCTS ARE 16 GA. MAX., EXCEPT THAT WHEN MAX. DUCT WIDTH IS OVER 60" THEN P/2 MAX. IS 1.25*WIDTH 12,10, OR 8 GA WIRE IS STEEL OF BLACK ANNEALED, BRIGHT BASIC, OR GALVANIZED TYPE.

RECTANGULAR DUCT SUPPORT DETAIL

NO SCALE

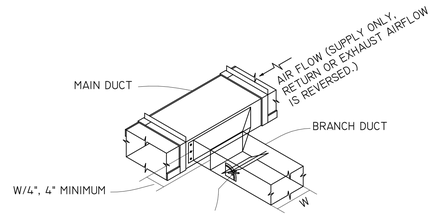

ADJUSTABLE VOLUME DAMPER WITH POSITIONING LEVER, EXTENSION SECTION (INSULATED DUCT ONLY) AND LOCKING WING NUT. VOLUME DAMPER SHALL BE SINGLE BLADE OR MULTI-BLADE DEPENDING ON.DUCT SIZE. SEE SPECIFICATIONS. LOCATE DAMPER MINIMUM 6" DOWNSTREAM OF TAKEOFF

TYPICAL BRANCH DUCT TAKEOFF

NOT TO SCALE

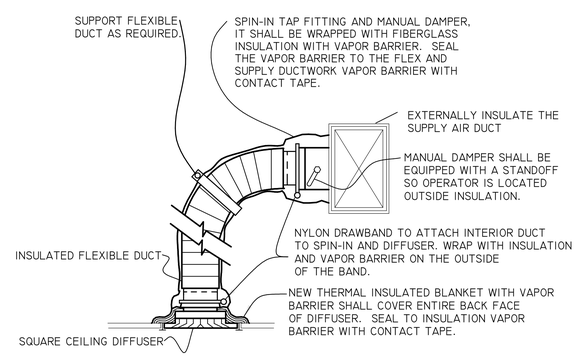

PANEL DIFFUSER DETAIL

NOT TO SCALE

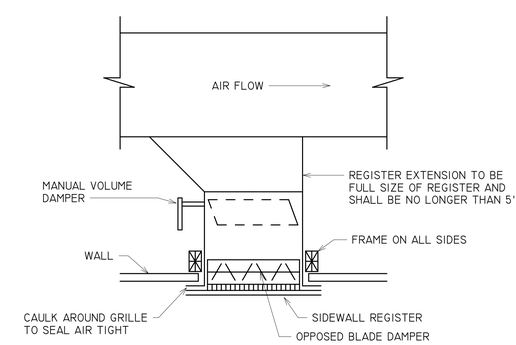

SIDEWALL REGISTER CONNECTION DETAIL

NOT TO SCALE

DocuSigned by:
1014BCEE86E745E...
DS
4/6/2026 | 14:01:32 PDT

W3 Engineering Inc.
110 E. WRIGHT ST.
PENSACOLA, FL 32502
T: (850)629-8270
F: (888)478-4898
FL P.E. #: 70595
FL AUTHORIZATION #: 31078

Printed copies of this document are not to be considered original, the original is digitally signed

GMC
GOODWYN MILLS CAWOOD, LLC.
720 Bayfront Parkway, Suite 200
Pensacola, FL 32502
T 850.432.0706
GMCNETWORK.COM
Gerald Steven Jernigan - Qualifying Agent
FL Architect AR 0009953

ISSUE	DATE
PERMIT SET	12/08/2025

DRAWN BY: ACL
CHECKED BY: JEW3

FRICKER RESOURCE CENTER RENOVATION PROJECT
900 N F St, Pensacola, FL 32501-2887
GMC # APEN250016

DS

JAMES E. WELLS III LICENSE No. 70595 STATE OF FLORIDA PROFESSIONAL ENGINEER

HVAC DETAILS

M5.1

4/6/2026 3:48:15 PM

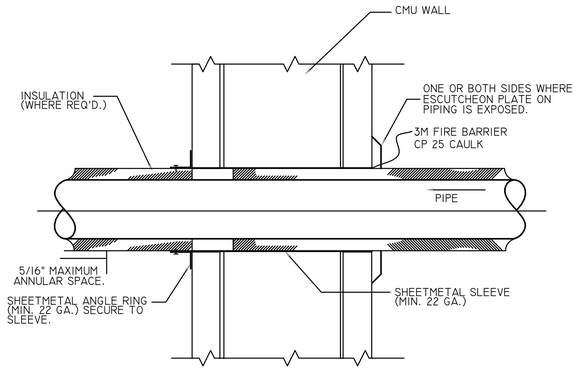

NOTE: PENETRATIONS SHALL MEET OR EXCEED RATING OF UL LISTED PENETRATION DETAILS.

PIPE SLEEVE THROUGH FIRE BARRIER DETAIL

NOT TO SCALE

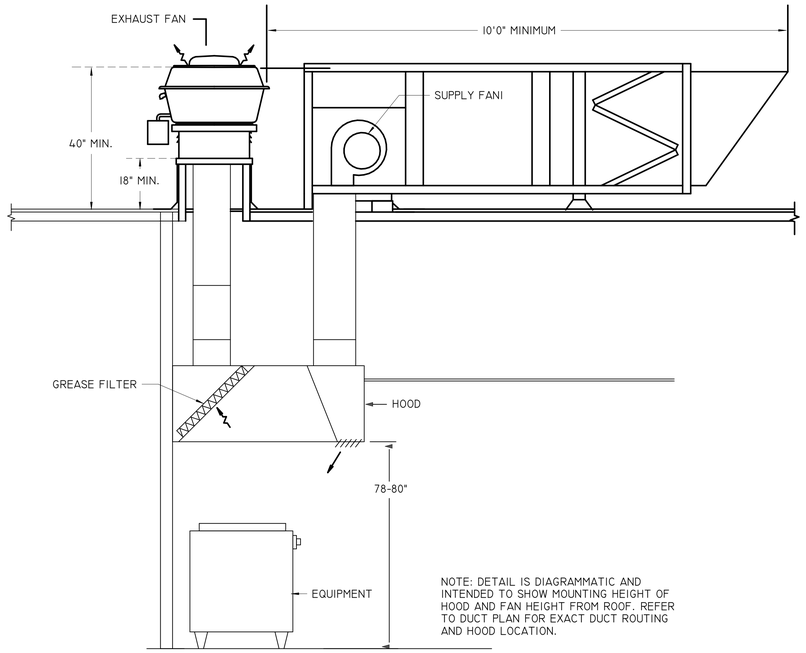

NOTE: DETAIL IS DIAGRAMMATIC AND INTENDED TO SHOW MOUNTING HEIGHT OF HOOD AND FAN HEIGHT FROM ROOF. REFER TO DUCT PLAN FOR EXACT DUCT ROUTING AND HOOD LOCATION.

KITCHEN HOOD 1 SYSTEM DETAIL

N.T.S. INSTALLATION TO MEET NFPA 96 REQUIREMENTS

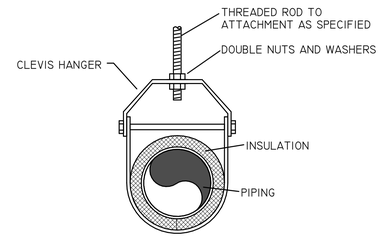

SINGLE OR GANG PIPE HANGER DETAIL

NOT TO SCALE

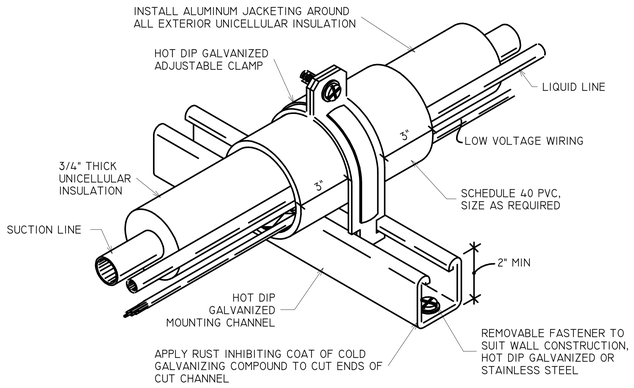

EXTERIOR REFRIGERANT PIPE MOUNTING DETAIL

NOT TO SCALE

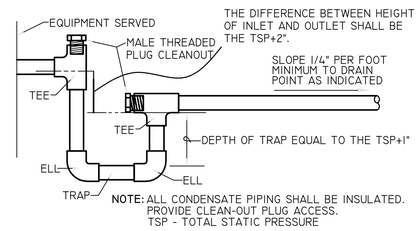

NOTE: ALL CONDENSATE PIPING SHALL BE INSULATED. PROVIDE CLEAN-OUT PLUG ACCESS. TSP - TOTAL STATIC PRESSURE

TYPICAL CONDENSATE DRAIN DETAIL DRAW THROUGH UNIT

NOT TO SCALE

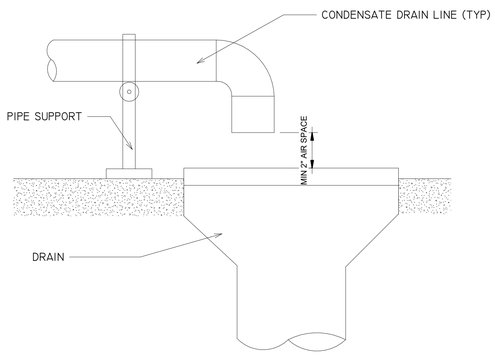

CONDENSATE PIPING TERMINATION DETAIL

NOT TO SCALE

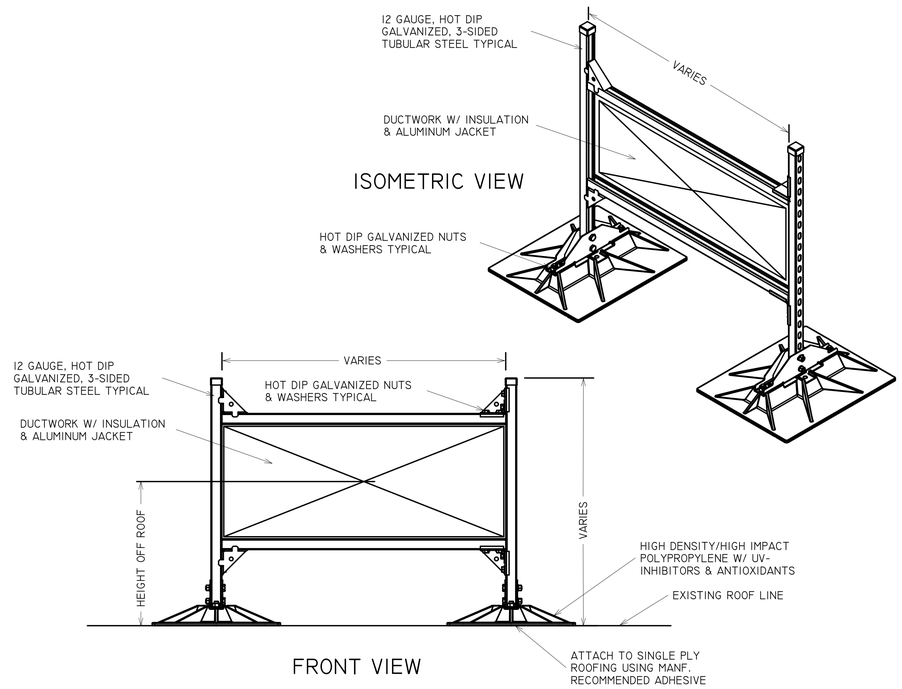

ROOFTOP DUCT SUPPORT DETAIL

NOT TO SCALE

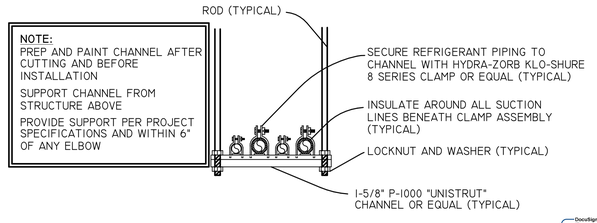

NOTE:
PREP AND PAINT CHANNEL AFTER CUTTING AND BEFORE INSTALLATION

SUPPORT CHANNEL FROM STRUCTURE ABOVE

PROVIDE SUPPORT PER PROJECT SPECIFICATIONS AND WITHIN 6" OF ANY ELBOW

OVERHEAD REFRIGERANT PIPE SUPPORT

NOT TO SCALE

DocuSigned by:
10146CEE9E7E45E...
DS

4/6/2026 | 14:01:32 PDT

W3 Engineering Inc.
110 E. WRIGHT ST.
PENSACOLA, FL 32502
T: (850)629-8270
F: (888)478-4898
FL P.E. #: 70595
FL AUTHORIZATION #: 31078

Printed copies of this document are not to be considered original, the original is digitally signed

GMC

GOODWYN MILLS CAWOOD, LLC.
720 Bayfront Parkway, Suite 200
Pensacola, FL 32502
T 850.432.0706
GMCNETWORK.COM
Gerald Steven Jernigan - Qualifying Agent
FL Architect AR 0009953

ISSUE	DATE
PERMIT SET	12/08/2025

DRAWN BY: ACL
CHECKED BY: JEW3

FRICKER RESOURCE CENTER RENOVATION PROJECT
900 N F St, Pensacola, FL 32501-2887
GMC # APEN250016

DS

JAMES E. WELLS LICENSED No. 70595 STATE OF FLORIDA PROFESSIONAL ENGINEER

HVAC DETAILS

M5.2

4/6/2026 3:48:20 PM

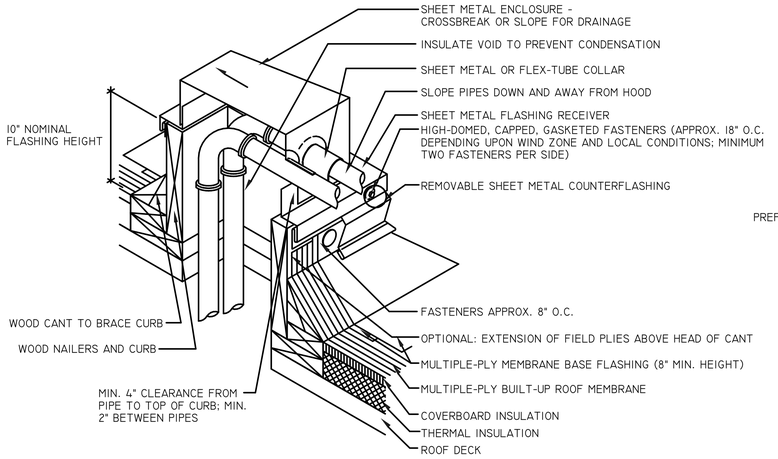

PENETRATION DETAIL NOTE:

THE WOOD NAILERS SHALL BE LUGGED TO THE ROOF BY USING EXPANSION BOLTS, SET IN EPOXY, 2 BOLTS PER BOARD. THE THERMAL INSOLATION SHALL UTILIZE MASTIC FOR CONNECTING TO THE ROOF DECK.

ROOF PIPING PENETRATION DETAIL

NO SCALE

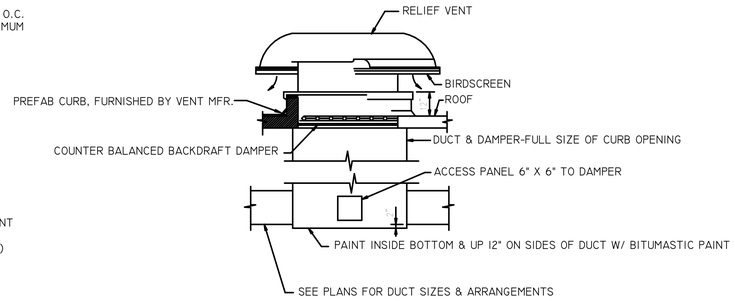

TYPICAL RELIEF VENT DETAIL (WITH DUCT WORK)

NOT TO SCALE

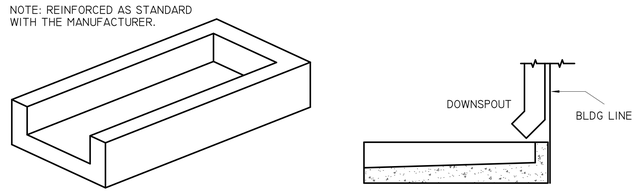

SPLASH BLOCK DETAIL

NOT TO SCALE

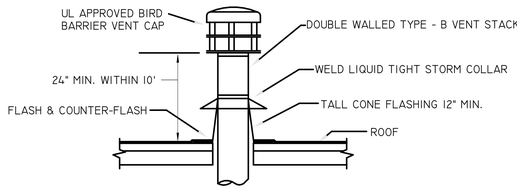

FLUE DETAIL

NOT TO SCALE

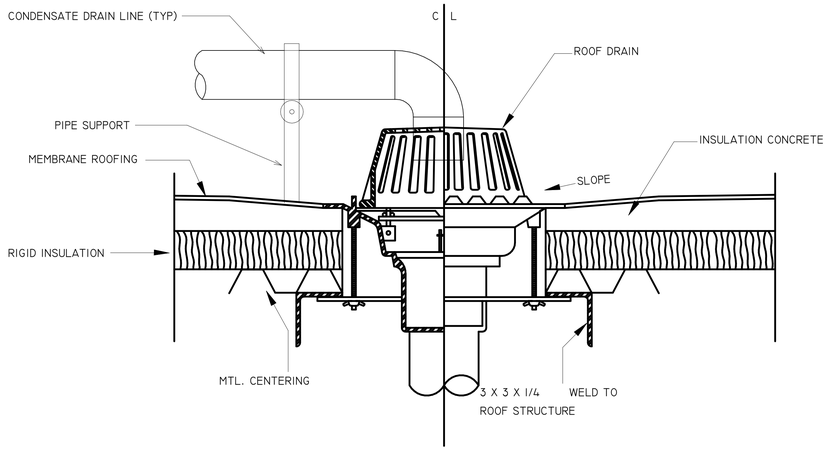

NOTE: DO NOT CUT BASKET STRAINER ON THE ROOF DRAIN. ROUTE ALL CONDENSATE TO PRIMARY ROOF DRAIN.

CONDENSATE PIPING TERMINATION DETAIL AT ROOF DRAIN

NOT TO SCALE

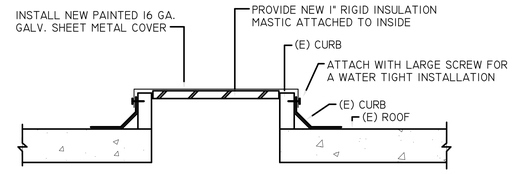

ROOF CURB CAP DETAIL

NOT TO SCALE

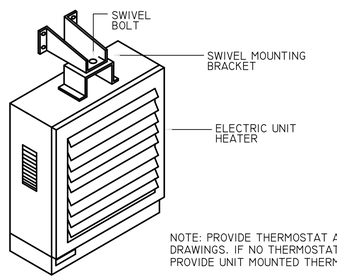

NOTE: PROVIDE THERMOSTAT AS INDICATED ON DRAWINGS. IF NO THERMOSTAT IS SHOWN, PROVIDE UNIT MOUNTED THERMOSTAT.

TYPICAL UNIT HEATER DETAIL

NOT TO SCALE

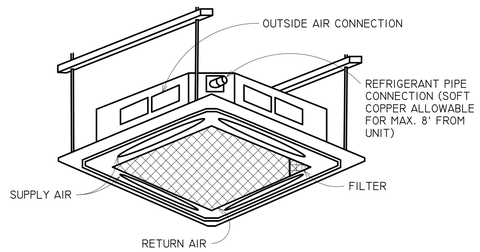

CEILING CASSETTE MOUNTING DETAIL

NOT TO SCALE

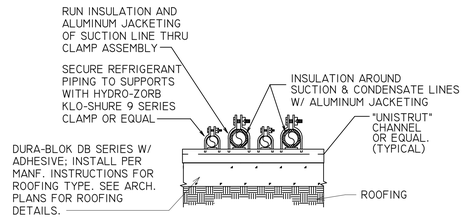

ROOFTOP PIPE SUPPORT DETAIL

NOT TO SCALE

DocuSigned by:
1314BCCEE9E745E...
DS
4/6/2026 | 14:01:32 PDT

W3 Engineering Inc.
110 E. WRIGHT ST.
PENSACOLA, FL 32502
T: (850)629-8270
F: (888)478-4898
FL P.E. #: 70595
FL AUTHORIZATION #: 31078

Printed copies of this document are not to be considered original, the original is digitally signed

GMC

GOODWYN MILLS CAWOOD, LLC.
720 Bayfront Parkway, Suite 200
Pensacola, FL 32502
T 850.432.0706
GMCNETWORK.COM
Gerald Steven Jernigan - Qualifying Agent
FL Architect AR 0009953

ISSUE	DATE
PERMIT SET	12/08/2025

DRAWN BY: ACL
CHECKED BY: JEW3

FRICKER RESOURCE CENTER RENOVATION PROJECT
900 N F St, Pensacola, FL 32501-2887
GMC # APEN250016

DS

JAMES E. WELLS III LICENSED No. 70595 STATE OF FLORIDA PROFESSIONAL ENGINEER

HVAC DETAILS

M5.3

4/6/2026 3:48:23 PM

DEDICATED OUTSIDE AIR UNIT SCHEDULE

MARK	REFRIGERANT TYPE	AIR DATA			COOLING DATA				GAS TYPE	HEATING DATA				CONDENSER DATA		COMPRESSOR DATA		ELECTRICAL DATA					DESCRIPTION
		OUTSIDE AIR FLOW	RETURN AIR FLOW	E.S.P	TOTAL COOLING CAPACITY	SENSIBLE COOLING CAPACITY	AMBIENT AIR TEMP.	COIL ENT. (DB/WB)		HEATING INPUT	HEATING OUTPUT	AMBIENT AIR TEMP.	COIL ENT. (DB)	#	HP	#	RLA	VOLTAGE	PHASE	HZ	MCA	MOCP	
DOAS-1	R-454B	2000	2000	0.50 IN-WG	256100.0 BTU/H	125700.0 BTU/H	95 °F	80/67	NATURAL GAS	302564.0 BTU/H	245077.0 BTU/H	47 °F	70	3	1.34	3	55.4	208	3	60	88.1	100	BASIS OF DESIGN: CAPTIVEAIRE CAS-HVAC3-1.400-24-20T
DOAS-2	R-454B	1320	0	0.50 IN-WG	110900.0 BTU/H	57800.0 BTU/H	95 °F	80/67	NATURAL GAS	93986.0 BTU/H	76129.0 BTU/H	47 °F	70	2	1.34	1	38.7	208	3	60	54.5	60	BASIS OF DESIGN: CAPTIVEAIRE CAS-HVAC2-1.100-15-10T-DOAS

NOTES:
-- UNIT CAPACITIES RATED AT ARI CONDITIONS @ NONIMAL AIRFLOW.
-- PROVIDE FACTORY SUPPLIED WIRED WALL-MOUNTED PROGRAMMABLE THERMOSTAT. LOCATE AS INDICATED.
-- PROVIDE DOAS-1 WITH AT LEAST 79MBH OF HOT GAS REHEAT.
-- PROVIDE VIBRATION ISOLATION.
-- PROVIDE DOAS-2 WITH AT LEAST 22MBH OF HOT GAS REHEAT.
-- CONTRACTOR SHALL ALLOW 0.2 INCHES EXTRA STATIC DROP FOR DIRTY FILTERS.
-- PROVIDE SINGLE POINT POWER CONNECTION.
-- PROVIDE REGULATOR TO DROP GAS PRESSURE FROM 2PSI TO 7" W.C.

ROOFTOP AIR CONDITIONER W/ GAS HEAT UNIT SCHEDULE

MARK	REFRIGERANT TYPE	AIR DATA			COOLING DATA				HEATING DATA					EVAPORATOR DATA		CONDENSER DATA		COMPRESSOR DATA		ELECTRICAL DATA					DESCRIPTION
		SUPPLY AIR FLOW	OUTSIDE AIRFLOW	E.S.P	TOTAL COOLING CAPACITY	SENSIBLE COOLING CAPACITY	AMBIENT AIR TEMP.	COIL ENT. (DB/WB)	INPUT HEATING CAPACITY	OUTPUT HEATING CAPACITY	NO. OF STAGES	AMBIENT AIR TEMP.	COIL ENT. (DB)	#	HP	#	HP	#	RLA	VOLTAGE	PHASE	HZ	MCA	MOCP	
RTU-1	R-454B	1000	100	0.50 IN-WG	31100.0 BTU/H	23100.0 BTU/H	95 °F	80/67	70000.0 BTU/H	56700.0 BTU/H	2	47 °F	70	1	0.5	1	0.1667	1	14.6	208	1	60	23	35	BASIS OF DESIGN: TRANE 5YCZ5030
RTU-2	R-454B	1600	160	0.50 IN-WG	48520.0 BTU/H	35920.0 BTU/H	95 °F	80/67	100000.0 BTU/H	81000.0 BTU/H	2	47 °F	70	1	1.0	1	0.333	1	14.8	208	3	60	27	40	BASIS OF DESIGN: TRANE YSK048
RTU-3	R-454B	1000	100	0.50 IN-WG	31100.0 BTU/H	23100.0 BTU/H	95 °F	80/67	56700.0 BTU/H	45400 BTU/H	2	47 °F	70	1	0.5	1	0.1667	1	14.6	208	1	60	23	35	BASIS OF DESIGN: TRANE 5YCZ5030
RTU-4	R-454B	2000	125	0.50 IN-WG	58000.0 BTU/H	45960.0 BTU/H	95 °F	80/67	92000.0 BTU/H	74500 BTU/H	2	47 °F	70	1	1.0	1	0.250	1	13.8	208	3	60	26	35	2-SPEED, 5-TON RTU W/ GAS HEAT; BASIS OF DESIGN: TRANE 5YCZ5060
RTU-5	R-410A	1200	600	0.50 IN-WG	37200.0 BTU/H	27800.0 BTU/H	95 °F	80/67	120000.0 BTU/H	96000.0 BTU/H	1	47 °F	70	1	1.0	1	0.333	1	12.8	208	3	60	23	35	EXISTING UNIT; BASIS OF DESIGN: TRANE YSC036E3RH
RTU-6	R-454B	2000	200	0.50 IN-WG	59510.0 BTU/H	45960.0 BTU/H	95 °F	80/67	80000.0 BTU/H	64800 BTU/H	2	47 °F	70	1	1.0	1	0.400	1	16.5	208	3	60	29	45	BASIS OF DESIGN: TRANE YSK060A3S0L
RTU-7	R-454B	4000	400	0.50 IN-WG	121700.0 BTU/H	93170.0 BTU/H	95 °F	80/67	150000.0 BTU/H	121500 BTU/H	2	47 °F	70	1	3.0	1	0.750	2	25.2 / 13.2	208	3	60	57	80	BASIS OF DESIGN: TRANE YSKI20A3S0L
RTU-8	R-410A	4000	400	0.50 IN-WG	119000.0 BTU/H	92700.0 BTU/H	95 °F	80/67	150000.0 BTU/H	120000.0 BTU/H	2	47 °F	70	1	3.8	1	0.750	2	20.5 / 16.0	208	3	60	49.6	60	EXISTING UNIT; BASIS OF DESIGN: TRANE YSCI20F3RL
RTU-9	R-410A	4000	400	0.50 IN-WG	119000.0 BTU/H	92700.0 BTU/H	95 °F	80/67	150000.0 BTU/H	120000.0 BTU/H	2	47 °F	70	1	3.8	1	0.750	2	20.5 / 16.0	208	3	60	49.6	60	EXISTING UNI; BASIS OF DESIGN: TRANE YSCI20F3RL
RTU-10	R-410A	4000	400	0.50 IN-WG	119000.0 BTU/H	92700.0 BTU/H	95 °F	80/67	150000.0 BTU/H	120000.0 BTU/H	2	47 °F	70	1	3.8	1	0.750	2	20.5 / 16.0	208	3	60	49.6	60	EXISTING UNIT; BASIS OF DESIGN: TRANE YSCI20F3RL
RTU-11	R-410A	4000	400	0.50 IN-WG	119000.0 BTU/H	92700.0 BTU/H	95 °F	80/67	150000.0 BTU/H	120000.0 BTU/H	2	47 °F	70	1	3.8	1	0.750	2	20.5 / 16.0	208	3	60	49.6	60	EXISTING UNIT; BASIS OF DESIGN: TRANE YSCI20F3RL
RTU-12	R-410A	0	0	0.00 IN-WG	0.0 BTU/H	0.0 BTU/H	95 °F	80/67	0.0 BTU/H			47 °F	70	1	1.0	1			12.8				23	35	EXISTING UNIT.

NOTES:
-- UNIT CAPACITIES RATED AT ARI CONDITIONS @ NONIMAL AIRFLOW.
-- PROVIDE FACTORY SUPPLIED WIRED WALL-MOUNTED PROGRAMMABLE THERMOSTAT. LOCATE AS INDICATED.
-- CONTRACTOR SHALL FIELD VERIFY ROOF INSULATION HEIGHT AND PROVIDE CURB HEIGHT IN ACCORDANCE W/ FLORIDA MECHANICAL CODE.
-- CONTRACTOR SHALL ALLOW 0.2 INCHES EXTRA STATIC DROP FOR DIRTY FILTERS.
-- PROVIDE VIBRATION ISOLATION.
-- PROVIDE SINGLE POINT POWER CONNECTION.
-- PROVIDE 120V BIPOLAR IONIZER TO SUPPLY AIR OF ALL UNITS.
-- FIELD VERIFY EXISTING UNIT ELECTRICAL DATA.
-- PROVIDE UVC GERMICIDAL LAMPS DOWNSTREAM OF COOLING COIL FOR ALL NEW EQUIPMENT.

EXHAUST FAN SCHEDULE

MARK	DRIVE TYPE	EXHAUST AIR FLOW	E.S.P	MAX RPM	OUTLET SONES	ELECTRICAL DATA				DESCRIPTION
						MOTOR HP	VOLTAGE	PHASE	HZ	
EF-1	DIRECT / ROOF	2100	1.10 IN-WG	1217	14.37	1.000	208	1	60	INTERLOCK W/ KITCHEN HOOD; BASIS OF DESIGN: ACCUREX XCUE-160-VG
EF-2	BELT / ROOF	420	0.40 IN-WG	1060	5.4	0.250	208	3	60	INTERLOCK W/ OCCUPANCY SCHEDULE BASIS OF DESIGN: GREENHECK CUBE-100
EF-3	BELT / ROOF	560	0.40 IN-WG	1060	5.4	0.250	208	3	60	INTERLOCK W/ OCCUPANCY SCHEDULE BASIS OF DESIGN: GREENHECK CUBE-100
EF-4	DIRECT / ROOF	400	0.40 IN-WG	1550	10.0	0.125	115	1	60	EXISTING TO REMAIN. REBALANCE AIRFLOWS AS INDICATED. BASIS OF DESIGN: GREENHECK G-095-DGE
EF-5	DIRECT / CEILING	125	0.40 IN-WG	1400	1.5	0.073	115	1	60	INTERLOCK W/ LIGHTSWITCH; BASIS OF DESIGN: GREENHECK SP-A

NOTES:
-- ALL EXHAUST FANS SHALL BE INSTALLED WITH FLEXIBLE DUCT CONNECTION, VIBRATION ISOLATORS, AND FLEXIBLE CONDUIT, FAN SHALL NOT BE IN CONTACT WITH ANY OTHER DUCT, PIPING, CONDUIT, OR STRUCTURAL MEMBERS.
-- FANS SHALL BE PROVIDED WITH BACKDRAFT DAMPERS.
-- ALL DIRECT DRIVE FANS WITH MOTORS LESS THAN 1/2 HP SHALL BE PROVIDED WITH AN ADJUSTABLE ELECTRONIC SPEED CONTROLLER.

UNIT HEATER SCHEDULE

MARK	AIR FLOW (CFM)	ELECTRICAL DATA				DESCRIPTION
		KW	VOLTAGE	PHASE	AMPS	
UH-1	350	5	208	3	24	BASIS OF DESIGN: MARLEY MUH0581

NOTES:
-- UNIT CAPACITIES RATED AT ARI CONDITIONS @ NONIMAL AIRFLOW.
-- PROVIDE FACTORY SUPPLIED WIRED WALL-MOUNTED PROGRAMMABLE THERMOSTAT. LOCATE AS INDICATED.

MAKE-UP AIR UNIT SCHEDULE

MARK	REFRIGERANT TYPE	AIR DATA		COOLING DATA			CONDENSER DATA		COMPRESSOR DATA		ELECTRICAL DATA					DESCRIPTION
		OUTSIDE AIR FLOW	E.S.P	TOTAL COOLING CAPACITY	SENSIBLE COOLING CAPACITY	AMBIENT AIR TEMP.	#	HP	#	FLA	VOLTAGE	PHASE	HZ	MCA	MOCP	
MUA-1	R-454B	1680	0.50 IN-WG	50200.0 BTU/H	33600.0 BTU/H	95 °F	1	3/4	1	3.5	208	3	60	22.5	30	INTERLOCK W/ KITCHEN HOOD; BASIS OF DESIGN: ACCUREX XMSX-PII6-HI2-DI-3

NOTES:
-- UNIT CAPACITIES RATED AT ARI CONDITIONS @ NONIMAL AIRFLOW.
-- PROVIDE FACTORY SUPPLIED WIRED WALL-MOUNTED PROGRAMMABLE THERMOSTAT. LOCATE AS INDICATED.
-- CONTRACTOR SHALL ALLOW 0.2 INCHES EXTRA STATIC DROP FOR DIRTY FILTERS.
-- PROVIDE VIBRATION ISOLATION.

DUCTLESS SPLIT AIR HANDLING UNIT SCHEDULE

MARK	AIR DATA		COOLING DATA				HEATING DATA			EVAPORATOR DATA		ELECTRICAL DATA					DESCRIPTION
	AIR FLOW (L/M/H)	E.S.P	TOTAL COOLING CAPACITY	SENSIBLE COOLING CAPACITY	AMBIENT AIR TEMP.	COIL ENT. (DB/WB)	HEATING CAPACITY	AMBIENT AIR TEMP.	COIL ENT. (DB)	#	HP	VOLTAGE	PHASE	HZ	SYSTEM MCA	SYSTEM MOCP	
DAC-1.1	247 / 300 / 353	0.50 IN-WG	12000.0 BTU/H	12000.0 BTU/H	95 °F	80/67	13500.0 BTU/H	47 °F	70	1	0.05	208	1	60	0.4	15	BASIS OF DESIGN: TRANE 4MXW2312
DAC-1.2	247 / 300 / 353	0.50 IN-WG	12000.0 BTU/H	12000.0 BTU/H	95 °F	80/67	13500.0 BTU/H	47 °F	70	1	0.05	208	1	60	0.4	15	BASIS OF DESIGN: TRANE 4MXW2312
DAC-2	247 / 300 / 353	0.50 IN-WG	12000.0 BTU/H	12000.0 BTU/H	95 °F	80/67	13500.0 BTU/H	47 °F	70	1	0.05	208	1	60	0.4	15	BASIS OF DESIGN: TRANE 4MXW2312

1

NOTES:
-- UNIT CAPACITIES RATED AT ARI CONDITIONS @ NONIMAL AIRFLOW.
-- PROVIDE SINGLE POINT POWER CONNECTION.
-- PROVIDE VIBRATION ISOLATION.

DUCTLESS SPLIT HEAT PUMP UNIT SCHEDULE

MARK	REFRIGERANT TYPE	COOLING DATA		HEATING DATA		ENERGY PERFORMANCE		CONDENSER DATA		COMPRESSOR DATA		ELECTRICAL DATA					DESCRIPTION
		TOTAL COOLING CAPACITY	AMBIENT AIR TEMP.	HEATING CAPACITY	AMBIENT AIR TEMP.	EER / SEER	HSPF / COP	#	HP	#	RLA	VOLTAGE	PHASE	HZ	SYSTEM MCA	SYSTEM MOCP	
DCU-1	R-410A	21200.0 BTU/H	95 °F	23600.0 BTU/H	47 °F	12.2 / 19	9.0 / 3.45	1	1.0	1	16	208/230	1	60	16.4	20	BASIS OF DESIGN: TRANE 4TXK2324
DCU-2	R-410A	12000.0 BTU/H	95 °F	13500.0 BTU/H	47 °F	12.5 / 19	10.0 / 4.06	1	0.36	1	8.5	208	1	60	8.7	15	BASIS OF DESIGN: TRANE 4TXK2312

1

NOTES:
-- UNIT CAPACITIES RATED AT ARI CONDITIONS @ NONIMAL AIRFLOW.
-- PROVIDE SINGLE POINT POWER CONNECTION.

DocuSigned by:
5F4BCDE8BE745E...
DS
4/6/2026 | 14:01:32 PDT

W3 Engineering Inc.
110 E. WRIGHT ST.
PENSACOLA, FL 32502
T: (850)629-8270
F: (888)478-4898
FL P.E. #: 70595
FL AUTHORIZATION #: 31078

Printed copies of this document are not to be considered original, the original is digitally signed

GMC
GOODWYN MILLS CAWOOD, LLC.
720 Bayfront Parkway, Suite 200
Pensacola, FL 32502
T 850.432.0706
GMCNETWORK.COM
Gerald Steven Jernigan - Owner/Principal Architect
FL Architect AR 0009953

ISSUE	DATE
PERMIT SET	12/08/2025
1 REV. 1 CODE COMMENT	4-6-26

DRAWN BY: ACL
CHECKED BY: JEW3

FRICKER RESOURCE CENTER RENOVATION PROJECT
900 N F St, Pensacola, FL 32501-2887
GMC # APEN250016

DS
JAMES E. WELSH III
LICENSED
No. 70595
STATE OF
FLORIDA
PROFESSIONAL ENGINEER

HVAC SCHEDULES

M6.1

4/6/2026 3:48:28 PM

ENERGY RECOVERY UNIT SCHEDULE

MARK	OUTSIDE AIR FAN DATA			EXHAUST FAN DATA			ELECTRICAL DATA					DESCRIPTION
	OA FLOW	OA E.S.P	HP	EA FLOW	EA E.S.P.	HP	VOLTAGE	PHASE	HZ	MCA	MOCP	
ERV-1	600	0.50 IN-WG	1/2	600	0.40 IN-WG	1/2	208	1	60	19	25	INTERLOCK WITH RTU-6 OCCUPANCY SCHEDULE; BASIS OF DESIGN: GREENHECK ERV-10-20L-VG

NOTES:
-- PROVIDE BACNET COMMUNICATIONS CARD.
-- PROVIDE DESICCANT WHEEL STYLE ERV.

DIFFUSER AND REGISTER SCHEDULE

MARK	MIN. FLOW	MAX. FLOW	DUCT CONNECTION SIZE	AIR DEVICE SIZE	DESCRIPTION
A	35	85	6"Ø	12" x 12"	PANEL CEILING DIFFUSER; BASIS OF DESIGN: TITUS TMS
B	85	215	8"Ø	24" x 24"	PANEL CEILING DIFFUSER; BASIS OF DESIGN: TITUS SPECTRUM
C	220	380	10"Ø	24" x 24"	PANEL CEILING DIFFUSER; BASIS OF DESIGN: TITUS SPECTRUM
D	385	500	12"Ø	24" x 24"	PANEL CEILING DIFFUSER; BASIS OF DESIGN: TITUS SPECTRUM
F	0	180	8"Ø	4FT	1-SLOT, ALUMINUM ARCHITECTURAL LINEAR DIFFUSER; BASIS OF DESIGN: TITUS FL-10
G	0	270	8"Ø	6FT	1-SLOT, ALUMINUM ARCHITECTURAL LINEAR DIFFUSER; BASIS OF DESIGN: TITUS FL-10
H	175	340	12" x 6"	12" x 6"	3/4" BLADE SPACING, WALL SUPPLY DIFFUSER; BASIS OF DESIGN: TITUS 300FL
J	235	450	30" x 12"	30" x 12"	STEEL DOUBLE DEFLECTION, 3/4" BLADE SPACING, WALL SUPPLY DIFFUSER; BASIS OF DESIGN: TITUS 300RL
K	60	340	12" x 8"	12" x 8"	3/4" BLADE SPACING, 35 DEGREE DEFLECTION, WALL RETURN GRILLE; BASIS OF DESIGN: TITUS 350RL
L	185	1000	24" x 12"	24" x 12"	3/4" BLADE SPACING, 35 DEGREE DEFLECTION, WALL RETURN GRILLE; BASIS OF DESIGN: TITUS 350RL
M	0	480	12" x 12"	12" x 12"	SINGLE DEFLECTION 1/2" BLADE SPACING RETURN/EXHAUST GRILLE; BASIS OF DESIGN: TITUS 55FL
N	1125	1500	24" x 24"	24" x 24"	SINGLE DEFLECTION 1/2" BLADE SPACING RETURN/EXHAUST GRILLE; BASIS OF DESIGN: TITUS 55FL
Q	0	200	12" x 6"	4FT	1-SLOT ALUMINUM MODULINEAR SLOT RETURN; BASIS OF DESIGN: TITUS MLR-39

NOTES:
-- PROVIDE 24"X24" LAY IN PANEL FOR LAY IN TYPE CEILINGS. PROVIDE PLASTER FRAME FOR AIR DEVICES IN GYP. BOARD CEILINGS.
-- PROVIDE AIR DEVICE WITH DUCT CONNECTION SHOWN ON SCHEDULE UNLESS OTHERWISE NOTED ON PLANS.
-- MAXIMUM NC FOR DEVICES IS 20.
-- PROVIDE BOWDEN CABLE SYSTEM FOR BALANCING DAMPERS WHERE DAMPERS ARE LOCATED ABOVE GYP. BOARD CEILINGS.
-- PROVIDE REGISTERS WITH BALANCING DAMPERS.
-- CONTRACTOR SHALL PROVIDE ADDITIONAL BALANCING DAMPERS EACH BRANCH OF RETURN/EXHAUST DUCT AS REQUIRED FOR BALANCING SYSTEM.

DEHUMIDIFIER SCHEDULE

MARK	REFRIGERANT TYPE	CAPACITY	ENERGY PERFORMANCE	BLOWER DATA		ELECTRICAL DATA			DESCRIPTION
				AIR FLOW	E.S.P	VOLTAGE	AMPS	HZ	
DH-1	R-410A	90 PINTS	6.1 PINTS/KWH	320	0.00 IN-WG	120	5.3	60	BASIS OF DESIGN: HONEYWELL DR90A3000
DH-2	R-410A	90 PINTS	6.1 PINTS/KWH	320	0.00 IN-WG	120	5.3	60	BASIS OF DESIGN: HONEYWELL DR90A3000
DH-3	R-410A	90 PINTS	6.1 PINTS/KWH	320	0.00 IN-WG	120	5.3	60	BASIS OF DESIGN: HONEYWELL DR90A3000
DH-4	R-410A	90 PINTS	6.1 PINTS/KWH	320	0.00 IN-WG	120	5.3	60	BASIS OF DESIGN: HONEYWELL DR90A3000
DH-5	R-410A	120 PINTS	6.1 PINTS/KWH	400	0.00 IN-WG	120	7.3	60	BASIS OF DESIGN: HONEYWELL DR120A3000
DH-6	R-410A	65 PINTS	4.7 PINTS/KWH	160	0.00 IN-WG	120	5.2	60	BASIS OF DESIGN: HONEYWELL DR65A3000
DH-7	R-410A	90 PINTS	6.1 PINTS/KWH	320	0.00 IN-WG	120	5.3	60	BASIS OF DESIGN: HONEYWELL DR90A3000
DH-8	R-410A	90 PINTS	6.1 PINTS/KWH	320	0.00 IN-WG	120	5.3	60	BASIS OF DESIGN: HONEYWELL DR90A3000
DH-9	R-410A	90 PINTS	6.1 PINTS/KWH	320	0.00 IN-WG	120	5.3	60	BASIS OF DESIGN: HONEYWELL DR90A3000

NOTES:
-- UNIT CAPACITIES RATED AT ARI CONDITIONS @ NONIMAL AIRFLOW.
-- PROVIDE WALL-MOUNT HUMIDISTAT.
-- PROVIDE SINGLE POINT POWER CONNECTION.

VENTILATION SCHEDULE

SPACE NUMBER	SPACE NAME	ANSI/ASHRAE STANDARD 62.1; VENTILATION							DESIGN AIRFLOW RATES (CFM)			
		AREA CALCULATION			PEOPLE CALCULATION			MIN. VENTILATION (CFM)				
		AREA (SF)	OA PER AREA (CFM/SF)	VENTILATION RATE (CFM)	# PEOPLE	OA PER PERSON	VENTILATION RATE (CFM)		VENTILATION	SUPPLY	RETURN	EXHAUST
DOAS-1												
102	SOCIAL HALL	2017.66	0.06	121.06	150	5.00	750.00	871	2000	4000	2000	0
							750.00	**871**	**2000**	**4000**	**2000**	**0**
DOAS-2												
113	PANTRY	210.00	0.12	25.20	0	0.00	0.00	25	100	100	0	0
114	REST. D	205.65	0.00	0.00	0	0.00	0.00	0	160	160	0	280
115	SOCIAL HALL STORAGE	312.11	0.12	37.45	0	0.00	0.00	37	200	200	0	0
116	REST. C	218.94	0.00	0.00	0	0.00	0.00	0	160	160	0	280
118	INTERIOR CORRIDOR	1077.27	0.06	64.64	0	0.00	0.00	65	780	780	0	0
							0.00	**127**	**1400**	**1400**	**0**	**560**
EF-4												
134A	ELEC. B	60.47	0.00	0.00	0	0.00	0.00	0	0	0	0	260
134B	ELEC. A	28.87	0.00	0.00	0	0.00	0.00	0	0	0	0	140
							0.00	**0**	**0**	**0**	**0**	**400**
RTU-1												
112	ARTS AND CRAFT	404.79	0.06	24.29	10	7.50	75.00	99	100	1000	900	0
							75.00	**99**	**100**	**1000**	**900**	**0**
RTU-2												
111	MULTIPURPOSE ROOM	941.05	0.06	56.46	15	5.00	75.00	131	160	1600	1440	0
							75.00	**131**	**160**	**1600**	**1440**	**0**
RTU-3												
110	LIBRARY	421.34	0.12	50.56	10	5.00	50.00	101	100	1000	900	0
							50.00	**101**	**100**	**1000**	**900**	**0**
RTU-4												
104	STEM LAB	671.41	0.06	40.28	12	7.50	90.00	130	90	900	900	0
106	3D PRINTER	80.01	0.12	9.60	0	0.00	0.00	10	40	400	0	125
109	STORAGE	193.14	0.12	23.18	0	0.00	0.00	23	5	50	100	0
120	ENTRY CORRIDOR	1842.01	0.06	110.52	0	0.00	0.00	111	65	650	800	0
							90.00	**274**	**200**	**2000**	**1800**	**125**
RTU-5												
121	CORRIDOR	989.81	0.06	59.39	0	0.00	0.00	59	125	250	560	0
125	ADA REST. A	65.52	0.00	0.00	0	0.00	0.00	0	20	40	0	70
126	REST.A	265.59	0.00	0.00	0	0.00	0.00	0	100	200	0	350
127	SHWR	53.58	0.00	0.00	0	0.00	0.00	0	20	40	0	70
128	STAFF TLT.	82.25	0.00	0.00	0	0.00	0.00	0	20	40	0	70
129	REST. B	215.98	0.00	0.00	0	0.00	0.00	0	160	320	0	460
130	EVS./STO	59.56	0.00	0.00	0	0.00	0.00	0	20	40	0	70
131	ADA REST. B	58.74	0.00	0.00	0	0.00	0.00	0	20	40	0	70
136	LAUNDRY	113.80	0.12	13.66	0	5.00	0.00	14	75	150	0	0
							0.00	**73**	**560**	**1120**	**560**	**1160**
RTU-6												
101	WAITING AREA	476.81	0.06	28.61	5	5.00	25.00	54	21	210	300	0
108	STAFF BREAKROOM	276.72	0.06	16.60	3	5.00	15.00	32	40	400	300	0
117	STO.	76.25	0.12	9.15	0	0.00	0.00	9	5	50	0	0
122	OFFICE B	104.80	0.06	6.29	1	5.00	5.00	11	12	120	100	0
124	OFFICE A	112.41	0.06	6.74	1	5.00	5.00	12	11	110	110	0
135	CHECK-IN	212.19	0.06	12.73	2	5.00	10.00	23	25	250	300	0
137	TELE H. B	61.51	0.06	3.69	1	5.00	5.00	9	8	80	80	0
138	STO.	38.17	0.00	0.00	0	0.00	0.00	0	4	40	0	0
140	OFFICE D	122.31	0.06	7.34	1	5.00	5.00	12	25	250	250	0
141	OFFICE C	141.42	0.06	8.49	1	5.00	5.00	13	41	410	280	0
143	TELE H. A	57.84	0.06	3.47	1	5.00	5.00	8	8	80	80	0
							80.00	**183**	**200**	**2000**	**1800**	**0**
RTU-7												
123	STORAGE	466.56	0.00	0.00	0	0.00	0.00	0	25	250	200	0
144	WORKFORCE DEVELOPMENT	1169.63	0.06	70.18	43	7.50	322.50	393	375	3750	3400	0
							322.50	**393**	**400**	**4000**	**3600**	**0**
							1442.50	**2252**	**5120**	**18120**	**13000**	**2245**

GMC

GOODWYN MILLS CAWOOD, LLC.
720 Bayfront Parkway, Suite 200
Pensacola, FL 32502
T 850.432.0706
GMCNETWORK.COM
Gerald Steven Jernigan -
Qualifying Agent
FL Architect AR 0009953

ISSUE	DATE
PERMIT SET	12/08/2025

DRAWN BY: ACL
CHECKED BY: JEW3

FRICKER RESOURCE CENTER RENOVATION PROJECT
900 N F St, Pensacola, FL 32501-2887
GMC # APEN250016

DS

JAMES E. WELLS
No. 70595
STATE OF FLORIDA
PROFESSIONAL ENGINEER

DocuSigned by:
1D1A8CEE8BE745E...
DS
4/6/2026 | 14:01:32 PDT

W3 Engineering Inc.
110 E. WRIGHT ST.
PENSACOLA, FL 32502
T: (850)629-8270
F: (888)478-4898
FL P.E. #: 70595
FL AUTHORIZATION #: 31078

HVAC SCHEDULES

M6.2

Printed copies of this document are not to be considered original, the original is digitally signed

4/6/2026 3:48:40 PM

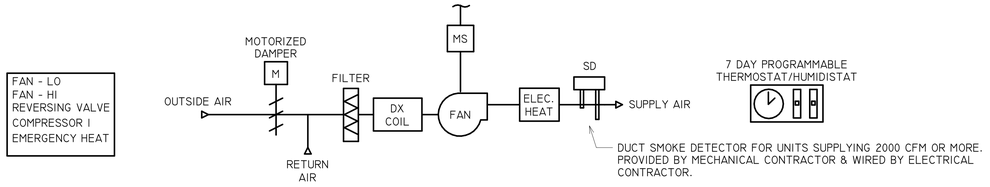

SEQUENCE OF OPERATION
THE INDOOR UNIT FAN SHALL BE STARTED AND THE OUTSIDE AIR DAMPER OPENED BY THE PROGRAMMABLE THERMOSTAT ACCORDING TO ITS' OCCUPIED/UNOCCUPIED SCHEDULE AS PROGRAMMED INTO THE THERMOSTAT.

WHEN ROOM TEMPERATURE RISES ABOVE THE COOLING SET POINT, THE OUTDOOR UNIT REVERSING VALVE AND DX COOLING SHALL BE CYCLED AND STAGED ON AS NEEDED TO SATISFY SPACE COOLING REQUIREMENTS. AS THE TEMPERATURE CONTINUES TO RISE ABOVE SETPOINT, THE FAN SHALL BE STAGED ON HI AND DX COOLING STAGED ON AS NEEDED TO SATISFY SPACE COOLING REQUIREMENTS.

WHEN ROOM TEMPERATURE FALLS BELOW THE HEATING SET POINT, THE OUTDOOR UNIT REVERSING VALVE AND ONE STAGE OF COMPRESSOR HEAT SHALL BE CYCLED AS NEEDED TO SATISFY SPACE HEATING REQUIREMENTS. IF OUTSIDE AIR TEMPERATURE IS BELOW 35°F AND COMPRESSOR HEAT IS INSUFFICIENT TO SATISFY SPACE HEATING DEMAND THE ELECTRIC AUXILIARY HEAT SHALL CYCLE ON. WHEN THE OUTDOOR UNIT DEFROST CIRCUIT IS ACTIVATED THE AUXILIARY HEAT SHALL CYCLE AS NEEDED TO PREVENT OVERCOOLING THE SPACE.

DURING UNOCCUPIED PERIODS, THE CONTROL SEQUENCE SHALL BE EXACTLY AS DESCRIBED ABOVE BUT WITH RESPECT TO NIGHT SETBACK HEATING AND COOLING SETPOINTS, HOWEVER, THE OUTSIDE AIR DAMPER SHALL REMAIN CLOSED. THE THERMOSTAT SHALL INCLUDE AN ADJUSTABLE 3-HR OVERRIDE TIMER SHALL BE PROVIDED FOR TEMPORARY OCCUPIED OVERRIDE.

TYPICAL HEAT PUMP UNIT CONTROL

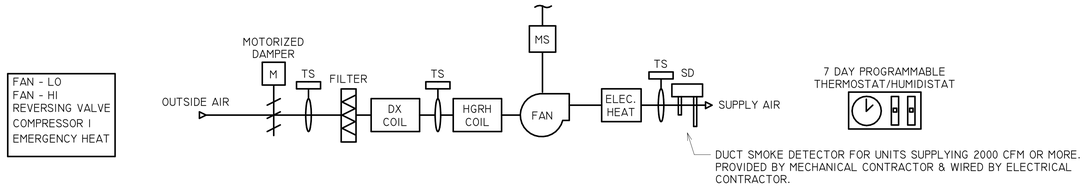

SEQUENCE OF OPERATION
THE INDOOR UNIT FAN SHALL BE STARTED AND THE OUTSIDE AIR DAMPER OPENED BY THE PROGRAMMABLE THERMOSTAT ACCORDING TO ITS' OCCUPIED/UNOCCUPIED SCHEDULE AS PROGRAMMED INTO THE THERMOSTAT.

WHEN OUTSIDE AIR TEMPERATURE RISES ABOVE THE COOLING SET POINT, THE OUTDOOR UNIT REVERSING VALVE AND DX COOLING SHALL BE CYCLED AND STAGED ON AS NEEDED TO MAINTAIN THE DX COIL DISCHARGE TEMPERATURE AT 55°F (ADJUSTABLE).

WHEN OUTSIDE AIR TEMPERATURE FALLS BELOW THE HEATING SET POINT, THE OUTDOOR UNIT REVERSING VALVE AND ONE STAGE OF COMPRESSOR HEAT SHALL BE CYCLED AS NEEDED TO MAINTAIN THE DX COIL DISCHARGE TEMPERATURE AT 52°F (ADJUSTABLE). IF OUTSIDE AIR TEMPERATURE IS BELOW 35°F AND COMPRESSOR HEAT IS INSUFFICIENT TO SATISFY SPACE HEATING DEMAND THE ELECTRIC AUXILIARY HEAT SHALL CYCLE ON. WHEN THE OUTDOOR UNIT DEFROST CIRCUIT IS ACTIVATED THE AUXILIARY HEAT SHALL CYCLE AS NEEDED TO PREVENT OVERCOOLING THE SPACE.

THE MODULATING HOT GAS REHEAT COIL SHALL ACT AS THE FIRST STAGE OF REHEAT AND MODULATE TO MAINTAIN A ROOM TEMPERATURE AT SETPOINT OF 74°F (ADJUSTABLE). WHEN ROOM AIR TEMPERATURE CONTINUES TO FALL BELOW THE SETPOINT, THE ELECTRIC HEAT SHALL BE ACTIVATED AS THE 2ND STAGE OF REHEAT TO MAINTAIN THE ROOM AIR TEMPERATURE AT SETPOINT.

DURING UNOCCUPIED PERIODS, THE CONTROL SEQUENCE SHALL BE EXACTLY AS DESCRIBED ABOVE BUT WITH RESPECT TO NIGHT SETBACK HEATING AND COOLING SETPOINTS, THE THERMOSTAT SHALL INCLUDE AN ADJUSTABLE 3-HR OVERRIDE TIMER SHALL BE PROVIDED FOR TEMPORARY OCCUPIED OVERRIDE.

TYPICAL OUTSIDE AIR UNIT CONTROL

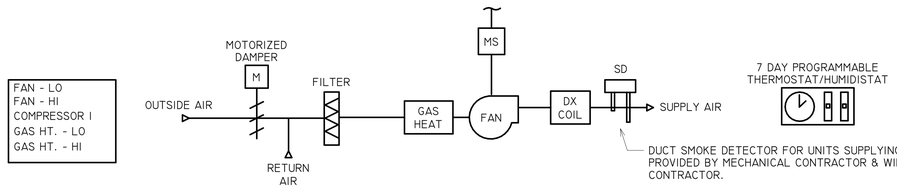

SEQUENCE OF OPERATION
THE INDOOR UNIT FAN SHALL BE STARTED AND THE OUTSIDE AIR DAMPER OPENED BY THE PROGRAMMABLE THERMOSTAT ACCORDING TO ITS' OCCUPIED/UNOCCUPIED SCHEDULE AS PROGRAMMED INTO THE THERMOSTAT.

WHEN ROOM TEMPERATURE RISES ABOVE THE COOLING SET POINT, THE DX COOLING SHALL BE CYCLED AND STAGED ON AS NEEDED TO SATISFY SPACE COOLING REQUIREMENTS. AS THE TEMPERATURE CONTINUES TO RISE ABOVE SETPOINT, THE FAN SHALL BE STAGED ON HI AND DX COOLING STAGED ON AS NEEDED TO SATISFY SPACE COOLING REQUIREMENTS.

WHEN ROOM TEMPERATURE FALLS BELOW THE HEATING SET POINT, THE GAS HEAT SHALL BE ENABLED ON LO TO SATISFY SPACE HEATING REQUIREMENTS. IF ROOM AIR TEMPERATURE ICONTINUES TO FALL BELOW THE HEATING SETPOINT THE DDC CONTROLS SHALL CYCLE ON THE GAS HEAT ON HI.

DURING UNOCCUPIED PERIODS, THE CONTROL SEQUENCE SHALL BE EXACTLY AS DESCRIBED ABOVE BUT WITH RESPECT TO NIGHT SETBACK HEATING AND COOLING SETPOINTS, HOWEVER, THE OUTSIDE AIR DAMPER SHALL REMAIN CLOSED. THE THERMOSTAT SHALL INCLUDE AN ADJUSTABLE 3-HR OVERRIDE TIMER SHALL BE PROVIDED FOR TEMPORARY OCCUPIED OVERRIDE.

THE DDC CONTROLS SHALL MONITOR SUPPLY AIR TEMPERATURE AND COMPRESSOR STATUS AND POST AN ALARM ANYTIME THE COMPRESSOR IS COMMANDED ON AND THE STATUS IS NOT VERIFIED. THE DDC CONTROL SYSTEM SHALL POST AN ALARM ANYTIME THE GAS HEAT IS ENABLED AND SUPPLY AIR TEMPERATURE IS BELOW 50 DEGF(ADJUSTABLE). THE DDC CONTROL SYSTEM SHALL MONITOR SPACE HUMIDITY.

TYPICAL AIR CONDITIONING W/ GAS HEAT UNIT CONTROL

GENERAL NOTES FOR CONTROL SYSTEMS

THE FOLLOWING ITEMS APPLY TO THE CONTROL SEQUENCES SPECIFIED HEREIN:
1. VARIABLE SPEED CONTROLS SHALL START AT LOW SPEED.

2. THE OPERATING POWER FOR VALVES, DAMPERS, ETC. SHALL BE ELECTRIC. POWER SHALL BE PROVIDED AS REQUIRED BY THE TEMPERATURE CONTROL CONTRACTOR.

3. UPON FAILURE AND RESTORATION OF POWER, SYSTEMS SHALL AUTOMATICALLY RESTART AND RETURN TO THEIR NORMAL MODE OF OPERATION. ADJUSTABLE TIME DELAYS SHALL BE PROVIDED TO SEQUENTIALLY STAGE STARTING OF EQUIPMENT WITH MOTORS GREATER THAN 5 HP OR LOADS GREATER THAN 4 KW.

4. CONTROL SET POINTS SHALL BE ADJUSTABLE OVER THE RANGE OF THE SENSED MEDIA. MEANS OF ADJUSTMENT AND CURRENT SET POINT SHALL BE IDENTIFIED. DDC SET POINTS SHALL BE PROGRAMMED AS VARIABLES, EXPRESSED IN THE APPROPRIATE ENGINEERING UNITS, WHICH CAN BE ADJUSTED THROUGH THE DIGITAL DISPLAY UNIT OR FROM A CENTRAL STATION WITHOUT REQUIRING MODIFICATION OR RELOADING OF THE DDC CONTROL PROGRAMS.

5. CONTROL OUTPUTS SHALL PROVIDE MAXIMUM RATED ACTUATOR POWER AT EXTREMES OF ACTUATOR TRAVEL. CONTROL OUTPUT RANGE (0-100%) SHALL CORRESPOND TO ACTUATOR TRAVEL (0-100%).

6. THE DDC SYSTEMS SHALL BE SETUP TO DISPLAY ALL ITEMS INDICATED ON THE FLOW DIAGRAMS.

7. ALL EQUIPMENT CONTROLLERS AND/OR COMMUNICATING PROGRAMMABLE THERMOSTATS SHALL COMMUNICATE VIA BACNET PER ASHRAE 135-2016.

8. PRIOR TO PROJECT COMPLETION, DDC COMMUNICATION AND CONTROL FROM THE DDC SERVER SHALL BE PROVEN.

9. ALL GRAPHICS AND POINTS SHALL BE LOCATED IN THE DDC CONTROLS SERVER WHICH SHALL SERVE AS THE WEB SERVER FOR THE SYSTEM. ALL TRENDED POINTS SHALL BE STORED ON THE DDC CONTROLS SERVER.

10. ALL HARDWARE AND SOFTWARE ADMINISTRATOR LEVEL PASSWORDS SHALL BE PROVIDED TO THE OWNER TO ACCESS ALL LEVELS OF ALL CONTROLLERS. THE PASSWORD SHALL ALLOW COMPLETE ACCESS TO EVERYTHING THE MANUFACTURER HAS ACCESS TO.

11. THE DDC CONTROLS CONTRACTOR SHALL PROVIDE SYSTEMS ENGINEERING TRAINING TO 2 PERSONNEL FOR 1/2 DAY.

12. ALL FIELD CONTROLLERS SHALL UTILIZE THE BACNET PROTOCOL FOR COMMUNICATIONS.

13. THE DDC CONTROLS CONTRACTOR SHALL COORDINATE TWO LAN DROPS WITHIN THREE FEET OF THE BUILDING SUPERVISORY CONTROLLER WITH THE TELECOM SUBCONTRACTOR AND PROVIDE A PATCH CABLE BETWEEN THE LAN DROP AND THE BUILDING LEVEL SUPERVISORY CONTROLLER.

14. GRAPHICS SHALL BE PROVIDED FOR ALL INPUT/OUTPUT SHOWN IN FLOW DIAGRAMS. THE DATE AND TIME SHALL BE INCLUDED ON ALL GRAPHICS SCREENS. GRAPHIC SCREENS FOR EACH SYSTEM SHALL BE PROVIDED. THE FLOORPLAN GRAPHIC SCREEN SHALL INCLUDE COLOR CODED ZONES WITH ROOM NUMBERS, SENSOR LOCATIONS, AND EQUIPMENT LOCATIONS. THE BUILDING GRAPHIC SCREEN SHALL BE LINKED TO THE MAIN MAP GRAPHIC SCREEN AND THE MAIN MAP GRAPHIC SCREEN SHALL BE UPDATED IF APPLICABLE. THE BUILDING GRAPHIC SCREEN SHALL CONTAIN LINKS TO ALL ALARMS, REPORTS, SCHEDULES, HISTORY, AND USER SERVICE.

15. THE DDC CONTROLS VENDOR SHALL BE BY ENGINEERED COOLING SERVICES. CONTACT ALESSA SMITH AT 850-512-2321 FOR DDC CONTROLS SUBCONTRACTOR PRICING. NO OTHER DDC CONTROLS SUBCONTRACTOR VENDOR SHALL BE ACCEPTABLE. ALL BIDS THAT UTILIZE ANOTHER DDC CONTROLS SUBCONTRACTOR SHALL BE DISQUALIFIED FROM AWARD OF THE PROJECT.

16. THE ENERGY RECOVERY VENTILATOR (ERV) SHALL BE PROVIDED WITH BACNET CARD AND FULLY INTEGRATED INTO DDC CONTROLS SYSTEM. THE ERV SHALL BE STARTED AND STOPPED WITH THE OCCUPIED/UNOCCUPIED SCHEDULE OF THE RESPECTIVE UNIT IT SERVES. THE ERV SHALL REMAIN OFF IN UNOCCUPIED TIMES.

17. THE DDC CONTROL SYSTEM SHALL MONITOR HUMIDITY IN THE SPACE VIA THE PRIMARY A/C UNIT CONTROLS. THE DEHUMIDIFIER SHALL OPERATE IN ACCORDANCE WITH IT'S INTERNAL CONTROLS.

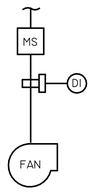

THE DDC CONTROL SYSTEM SHALL MONITOR THE EXHAUST FAN STATUS VIA CURRENT SENSING RELAY AND MONITOR THE EXHAUST FAN WALL SWITCH (IF APPLICABLE) AND POST AN ALARM ANY TIME THE FAN IS COMMANDED ON AND THE STATUS IS NOT SENSED.

EXHAUST FAN CONTROL

GOODWYN MILLS CAWOOD, LLC.
720 Bayfront Parkway, Suite 200
Pensacola, FL 32502
T 850.432.0706
GMCNETWORK.COM
Gerald Steven Jernigan - Qualifying Agent
FL Architect AR 0009953

ISSUE	DATE
PERMIT SET	12/08/2025

DRAWN BY: ACL
CHECKED BY: JEW3

FRICKER RESOURCE CENTER RENOVATION PROJECT
900 N F St, Pensacola, FL 32501-2887
GMC # APEN250016

DS

JAMES E. WELLS III
LICENSED
No. 70595
STATE OF FLORIDA
PROFESSIONAL ENGINEER

Docusigned by:
10140CEE86E745E...
DS
4/6/2026 | 14:01:32 PDT

W3 Engineering Inc.
110 E. WRIGHT ST.
PENSACOLA, FL 32502
T: (850)629-8270
F: (888)478-4898
FL P.E. #: 70595
FL AUTHORIZATION #: 31078

HVAC CONTROLS

M7.1

Printed copies of this document are not to be considered original, the original is digitally signed

4/6/2026 3:48:41 PM