MOBILE COUNTY

PROJECT NO: MCFM-2026-001

STRICKLAND YOUTH CENTER COURTROOM RENOVATION

2315 COSTARIDES ST
MOBILE, AL 36617

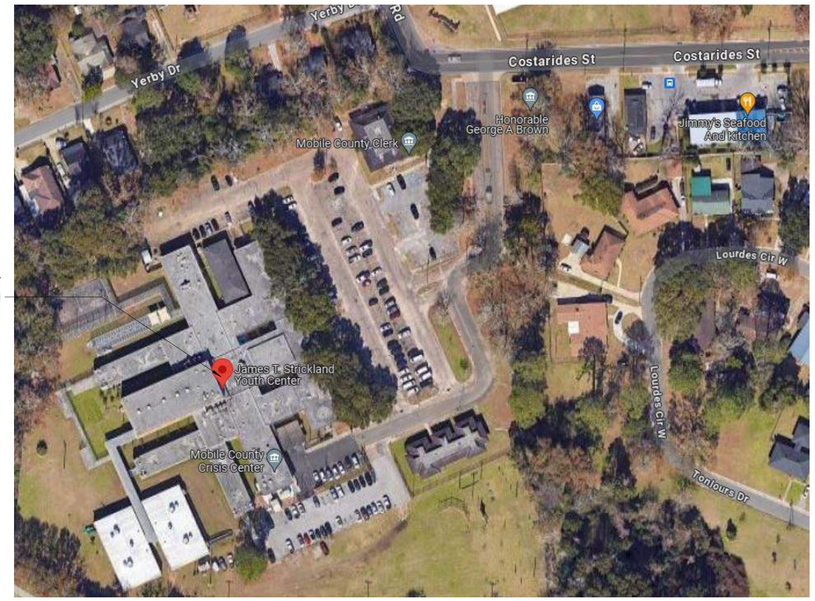

PROJECT LOCATION

D1 VICINITY MAP

N

CODE COMPLIANCE INFORMATION: 2021 CITY OF MOBILE

MOBILE COUNTY BUILDING CODE ADOPTION AND AMENDMENTS, ADOPTED JANUARY 7th, 2023
ACCESSIBILITY: IBC CHAPTER 11 AND ICC A117.1-2017
2021 INTERNATIONAL BUILDING CODE (IBC)
2021 INTERNATIONAL EXISTING BUILDING CODE (IEBC)
2020 NATIONAL ELECTRIC CODE (NEC - ALSO KNOWN AS NFPA 70)

NOTES:

THE CONTRACTOR AND ALL SUBCONTRACTED EMPLOYEES WILL BE SUBJECT TO BACKGROUND CHECKS BY MOBILE COUNTY.

DRAWING INDEX

SHEET INFORMATION

NUMBER	NAME
GENERAL	
G-001	COVER SHEET & DRAWING INDEX
ARCHITECTURE	
A-001	ARCHITECTURAL GENERAL NOTES, MATERIAL AND ANNOTATION LEGEND
AD101	ARCHITECTURAL - DEMOLITION PLAN
A-110	ARCHITECTURAL - MODIFICATION PLAN
A-501	INTERIOR ELEVATIONS
A-502	INTERIOR ELEVATIONS
A-503	INTERIOR/EXTERIOR ELEVATIONS
A-601	PARTITION TYPES
A-611	DOOR SCHEDULE, ELEVATIONS, & DETAILS
A-620	DETAIL SECTIONS
A-621	SECTIONS & DETAILS
A-622	SECTIONS & DETAILS
A-623	SECTION & DETAILS
A-630	ARCHITECTURAL DETAILS
INTERIORS	
IF110	INTERIOR PLANS & DETAILS
MECHANICAL	
M-100	MECHANICAL SCHEDULES
M-200	MECHANICAL FLOOR PLANS
M-300	MECHANICAL DETAILS
M-400	MECHANICAL DETAILS
ELECTRICAL	
E-101	ELECTRICAL - SPECIFICATIONS
E-102	ELECTRICAL - LEGEND AND DETAILS
E-201	ELECTRICAL - EXISTING PLAN
E-202	ELECTRICAL - NEW WORK PLAN

BAKER LPA GROUP, LLP
A VARIABLE INTEREST ENTITY OF MICHAEL BAKER INTERNATIONAL AND AFFILIATES.
Michael Baker INTERNATIONAL
MICHAEL BAKER INTERNATIONAL, INC.
11 N WATER ST SUIT 14290
MOBILE, ALABAMA 36602 (251)-380-0898

Smith Mechanical Consulting & Design
SMITH MECHANICAL CONSULTING & DESIGN
61 ST. JOSEPH STREET SUITE 1100
MOBILE, AL 36602 (251)-402-1364

JAGUAR CONSULTING
CHRISTINA MARIE P.E.
251.455.9189
JAGUAR CONSULTING, LLC
8658 CAPITAL DR,
MOBILE, ALBAMA 36695 (251)-455-9189

BAKER LPA GROUP, LLP
A VARIABLE INTEREST ENTITY OF MICHAEL BAKER INTERNATIONAL AND AFFILIATES.
Michael Baker INTERNATIONAL
11 NORTH WATER STREET
SUITE 14290 MOBILE, AL 36602

Consultant

STATE OF ALABAMA
DOUGLAS B. THOMPSON
7906
MOBILE, ALABAMA
REGISTERED ARCHITECT
07.08.26

SEAL

NO.	DATE	DESCRIPTION

REVISIONS

STRICKLAND YOUTH CENTER COURTROOM RENOVATION
2315 COSTARIDES ST
MOBILE, AL 36617

COVER SHEET & DRAWING INDEX

Project Number: **214010**
Date: 07-08-2026
Scale: **AS NOTED**
Sheet # G-001

ISSUED FOR BID

© Baker 2026

ABB	DESCRIPTION
A	
&	AND
<	ANGLE
@	AT
A/	ABOVE
ACP	ACOUSTIC CEILING PANEL
ADJ	ADJACENT, ADJUSTABLE
AED	AUTOMATED EXTERNAL DEFIBRILLATOR
AFF	ABOVE FINISHED FLOOR
AP	ACCESS PANEL
APPROX	APPROXIMATE(LY)
ARCH	ARCHITECT OR ARCHITECTURAL
ASTM	AMERICAN SOCIETY FOR TESTING MATERIAL
ATTEN	ATTENUATE, ATTENUATION
AVG	AVERAGE
B	
B/	BOTTOM OF
B/C	BOTTOM OF CURB
BC	BASE CABINET
BD	BOARD
BIT	BITUMINOUS
BLDG	BUILDING
BSMT	BASEMENT
C	
[	CHANNEL
C/	CENTER OF
CAB	CABINET
CC	CENTER TO CENTER
CG	CORNER GUARD
CJ	CORNER JOINT
CL	CENTER LINE
CLG	CEILING
CLG HT	CEILING HEIGHT
CLO	CLOSET
CLR	CLEAR
CMU	CONCRETE MASONRY UNIT
CO	CLEAN OUT
COL	COLUMN
CONC	CONCRETE
CONT	CONTINUOUS
CORR	CORRIDOR
CP	COPIER
CT	CERAMIC TILE
CY	CUBIC YARD
D	
DF	DRINKING FOUNTAIN
DIA	DIAMETER
DIM	DIMENSION
DN	DOWN
DW	DISHWASHER
DWG	DRAWING
E	
E	EAST
EA	EACH
EB	EDGE BANDING
EIFS	EXTERIOR INSULATION FINISH SYSTEM
EJ	EXPANSION JOINT
ELEC	ELECTRICAL
ELEV	ELEVATOR
EMER	EMERGENCY
ENCL	ENCLOSE(URE)
EP	ELECTRICAL PANEL
EQ	EQUAL
EQUIP	EQUIPMENT
EWC	ELECTRIC WATER COOLER
EXIST	EXISTING
EXP BLT	EXPANSION BOLT
EXT	EXTERIOR
F	
<	FABRIC
F/F	FACE TO FACE
FAX	FACSIMILE
FE	FIRE EXTINGUISHER
FEC	FIRE EXTINGUISHER CABINET
FHC	FIRE HOSE CABINET
FL	FLOOR
FL CO	FLOOR CLEANOUT
FP	FIRE PROTECTION
FPRF	FIREPROOF(ING)
FR	FIRE RATED OR FRAME
FT	FOOT/FEET
G	

ABB	DESCRIPTION
GA	GAUGE
GL	GLASS OR GLAZING
GRD	GROUND
GWB	GYPSUM WALL BOARD
H	
HB	HOSE BIBB
HC	HANDICAP(PED)
HDW	HARDWARE
HM	HOLLOW METAL
HOR	HORIZONTAL
HP	HIGH POINT
HTR	HEATER
I	
ID	INSIDE DIAMETER
IN	INCH(ES)
INT	INTERIOR
J	
JB	JAMB
JST	JOIST
JT	JOINT
L	
LAM	LAMINATE
LAN	LOCAL AREA NETWORK CONNECTION
LAV	LAVATORY
LB	POUND
LF	LINEAL FOOT
LP	LOW POINT
LTL	LINTEL
M	
m	METERS
MAS	MASONRY
MAX	MAXIMUM
MDF	MEDIUM DENSITY FIBERBOARD
MECH	MECHANICAL
MEZZ	MEZZANINE
MFR	MANUFACTURE
MH	MANHOLE
MICRO	MICROWAVE
MIN	MINIMUM
MISC	MISCELLANEOUS
mm	MILLIMETERS
MO	MASONRY OPENING
MTD	MOUNTED EL
MTL	METAL
N	
N	NORTH
NFPA	NATIONAL FIRE PROTECTION ASSOCIATION
NIC	NOT IN CONTRACT
NOM	NOMINAL
NTS	NOT TO SCALE
O	
OC	ON CENTER
OD	OUTSIDE DIAMETER
OFF	OFFICE
OPNG	OPENING
OPP	OPPOSITE
P	
PART	PARTITION
PL	PLATE
PLAM	PLASTIC LAMINATE
PLAS	PLASTER
PLYWD	PLYWOOD
PNL	PANEL
POS	POINT OF SALE
PR	PAIR
PRCST	PRECAST
PREFAB	PREFABRICATED
PROP	PROPERTY
PSI	POUNDS PER SQUARE INCH
PSIG	POUNDS PER SQUARE INCH GAUGE
PT	POINT
PTD	PAINTED
Q	
QTY	QUANTITY
R	
R	RISER OR RADIUS
RCP	REFLECTED CEILING PLAN
RD	ROOF DRAIN
REF	REFER / REFERENCE
REG	REGISTER
REINF	REINFORCING
REQ'D	REQUIRED

ABB	DESCRIPTION
RFG	REFRIGERATOR
RG	RANGE
RM	ROOM
RO	ROUGH OPENING
RTS	RUBBER TRANSITION STRIP
RWC	RAIN WATER CONDUCTOR
S	
S	SOUTH
SAN	SANITARY
SCHD	SCHEDULE
SEC	SECTION
SF	SQUARE FOOT
SIM	SIMILAR
SPKLR	SPRINKLER
SQ	SQUARE
SQ FT	SQUARE FOOT
SS	STAINLESS STEEL
STD	STANDARD
STL	STEEL
STN	STAINED
STOR	STORAGE
SUSP	SUSPEND, SUSPENDED, OR SUSPENSION
SYS	SYSTEM
T	
"T"	TEE (BAR OR W)
T	TREAD
T/	TOP OF
T/C	TOP OF CURB
TB	TACKBOARD
TC	TERRA COTTA
TEL	TELEPHONE
TEMP	TEMPERED OR TEMPERATURE
TERM	TERMINATE / TERMINAL
THRESH	THRESHOLD
TLT	TOILET
TV	TELEVISION
TYP	TYPICAL
U	
UH	UNIT HEATER
UL	UNDERWRITER'S LABORATORY
UMCT	UNGLAZED MOSAIC CERAMIC TILE
UNO	UNLESS NOTED OTHERWISE
V	
VEST	VESTIBULE
VIF	VERIFY IN FIELD
W	
W	WEST
W/	WITH
W/O	WITHOUT
WC	WATER CLOSET
WIN	WINDOW
WP	WATERPROOF(ING)
WSCT	WAINSCOT
WT	WEIGHT
WWF	WELDED WIRE REINFORCEMENT

SYMBOLS

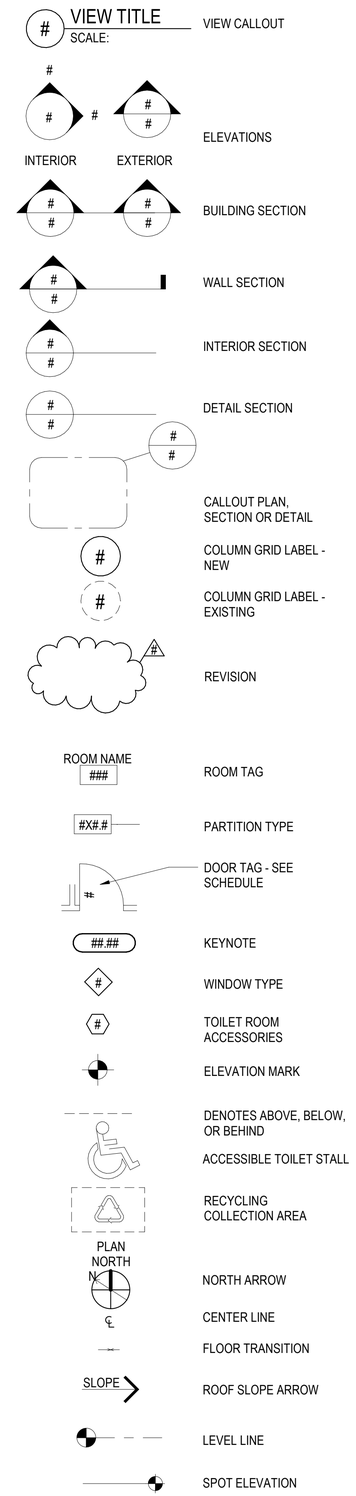

SECTIONS/ SECTIONAL DETAILS

- CONCRETE BLOCK
- CAST-IN-PLACE-CONCRETE
- STRUCTURAL/MISCELLANEOUS STEEL
- EARTH
- GRAVEL/ENGINEERED FILL
- STONE, OR NATURAL BUILDING STONE
- PLASTER OR GYPSUM BOARD, OR EXTERIOR SHEATHING
- BATT INSULATION
- ROOF, TAPERED, CAVITY OR RIGID INSULATION
- FINISHED WOOD TRIM
- PLYWOOD
- CAVITY DRAINAGE MATERIAL

PLANS/ PLAN FIRE RATED GRAPHICS

- SMOKE
- 1/2 HOUR
- 1 HOUR
- 2 HOUR
- 3 HOUR
- 4 HOUR

PLANS / PLAN DETAIL GRAPHICS

- BRICK WALLS
- CONCRETE BLOCK WALLS
- CAST-IN-PLACE-CONCRETE WALLS
- STUD WALLS
- CONCRETE SLABS AND/OR CONCRETE SIDEWALKS
- EXISTING WALLS

DOOR DESIGNATIONS

- EXISTING DOOR AND/OR FRAME TO REMAIN - SEE DOOR SCHEDULE FOR ANY ADDITIONAL WORK
- NEW DOOR AND/OR FRAME TO BE PROVIDED - SEE DOOR SCHEDULE
- EXISTING DOOR AND/OR FRAME TO BE REMOVED - SEE DEMO PLAN/NOTES

NOTES - GENERAL

1. ALL DIMENSIONS ARE IN FEET / INCHES UNLESS NOTED OTHERWISE
2. THESE GENERAL NOTES ARE NOT INTENDED TO REPLACE SPECIFICATIONS - REFER TO SPECIFICATIONS FOR REQUIREMENTS IN ADDITION TO GENERAL NOTES
3. THE TERMS RENOVATE AND REHABILITATE ARE USED INTERCHANGEABLY IN THESE DOCUMENTS.
4. ROOM AREAS AND PERIMETERS ARE APPROXIMATE AND FOR REFERENCE ONLY. VERIFY QUANTITIES AND DIMENSIONS IN FIELD.
5. NO DEVIATIONS FROM THESE CONTRACT DOCUMENTS SHALL BE MADE WITHOUT THE PRIOR WRITTEN APPROVAL OF THE ARCHITECT
6. DO NOT SCALE DIMENSIONS FROM DRAWINGS - THE CONTRACTOR SHALL REQUEST NECESSARY DIMENSIONS NOT SHOWN ON THE DRAWINGS FROM THE ARCHITECT
7. ALL DIMENSIONS ARE TO FACE OF PARTITION OR CENTER OF DOORS, WINDOWS AND OPENINGS UNLESS NOTED OTHERWISE - ALL NON-DIMENSIONED DOOR LOCATIONS SHALL BE OFFSET 4" FROM THE ADJACENT WALL TO THE HINGE SIDE OF THE DOOR OPENING.
8. DETAILS SHOWN ON DRAWINGS ARE TYPICAL FOR ALL SIMILAR CONDITIONS.
9. DRAWING NOTES AND SPECIFICATIONS ARE INSTRUCTIONS TO THE CONTRACTOR AND APPLY TO ALL THE WORK UNLESS MORE SPECIFIC INFORMATION IS SHOWN ELSEWHERE ON THE DRAWINGS OR WRITTEN IN THE SPECIFICATIONS - IN THE EVENT OF CONFLICTING INSTRUCTIONS, THE ARCHITECT SHALL DETERMINE WHAT CONTROLS
10. VERIFY ALL DIMENSIONS IN THE FIELD AND COORDINATE DIMENSIONS SHOWN ON THE CONTRACT DRAWINGS WITH FABRICATION AND FIELD CONDITIONS AND REPORT ANY INCONSISTENCIES TO THE ARCHITECT BEFORE PROCEEDING WITH WORK
11. PRINCIPAL OPENINGS IN THE STRUCTURE ARE SHOWN ON THESE DRAWINGS - THE GENERAL CONTRACTOR SHALL EXAMINE THE ARCHITECTURAL, MECHANICAL, ELECTRICAL, AND PLUMBING DRAWINGS FOR REQUIRED OPENINGS GENERAL CONTRACTOR SHALL VERIFY SIZE AND LOCATION OF ALL OPENINGS WITH ALL SUB-CONTRACTORS PRIOR TO CONSTRUCTION
12. STRUCTURAL DRAWINGS AND SPECIFICATIONS REPRESENT THE FINISHED STRUCTURE, AND, EXCEPT WHERE SPECIFICALLY SHOWN, DO NOT INDICATE THE METHOD OR MEANS OF CONSTRUCTION - THE CONTRACTOR SHALL SUPERVISE CONSTRUCTION MEANS, METHODS, PROCEDURES, TECHNIQUES, SEQUENCE, AND APPLICABLE SAFETY REGULATIONS TO BE FOLLOWED
13. CONTRACTOR SHALL BE RESPONSIBLE FOR SCHEDULING AND COORDINATING THE WORK OF THE SUB-CONTRACTORS - THE CONTRACTOR SHALL BE RESPONSIBLE TO COORDINATE WITH THE BUILDING OWNER, TENANT OR HIS REPRESENTATIVES THE DELIVERY AND INSTALLATION OF ITEMS BEING PROVIDED AND INSTALLED BY OTHERS
14. MECHANICAL, PLUMBING AND ELECTRICAL WORK RELATED TO DEMOLITION AND NEW INSTALLATION OF COMPONENTS SHALL COMPLY WITH ALL APPLICABLE CODES
15. ALL MATERIALS, FABRICATION AND INSTALLATION SHALL COMPLY WITH THE APPLICABLE REQUIREMENTS AND SPECIFICATIONS FOR EACH DIVISION OF WORK
16. CONSTRUCTION MUST COMPLY WITH APPLICABLE CODES AND ORDINANCES, LAWS AND SAFETY ORDERS AS DIRECTED BY LOCAL JURISDICTION
17. CONTRACTOR SHALL BE RESPONSIBLE FOR THE TIMELY ORDERING OF MATERIALS INCLUDED IN THESE CONTRACT DOCUMENTS - SOME ITEMS IN THESE DOCUMENTS MAY REQUIRE LONG LEAD TIMES OR SPECIAL COORDINATION SUBSTITUTIONS WILL NOT BE ALLOWED FOR MATERIAL NOT ORDERED IN A TIMELY FASHION
18. CONTRACTOR SHALL CHECK AND VERIFY ALL DIMENSIONS AND GRADE CONDITIONS, (BOTH NEW AND EXISTING) REPORTING ANY DISCREPANCIES TO THE ARCHITECT PRIOR TO ORDERING MATERIALS OR PROCEEDING WITH ANY PHASE OF THE WORK
19. CONTRACTOR SHALL CHECK AND VERIFY ALL DIMENSIONS PRIOR TO COMMENCING CONSTRUCTION - ALL DISCREPANCIES SHALL BE NOTED AND SENT TO THE ARCHITECT WITH ADEQUATE TIME TO REVIEW PRIOR TO STARTING THAT PORTION OF THE WORK IN ORDER TO AVOID PROJECT DELAYS
20. CONTRACTOR SHALL CLEAN, PATCH AND REPAIR ALL SURFACES DAMAGED BY DEMOLITION, ALTERATION OR INSTALLATION OF THE WORK
21. CONTRACTOR SHALL PREPARE ALL WALLS AND PARTITIONS AS REQUIRED BY THE FINISH MANUFACTURER TO RECEIVE THE FINISHES SPECIFIED
22. CONTRACTOR SHALL PROTECT ALL MONUMENTS, IRON PINS, AND PROPERTY CORNERS DURING CONSTRUCTION
23. CONTRACTOR SHALL PROVIDE ADDITIONAL FURRING (THE ENTIRE LENGTH OF THE WALL) TO FULLY CONCEAL ALL MECHANICAL, ELECTRICAL, PLUMBING AND STRUCTURAL ITEMS THAT PROJECT FROM THE FACE OF THE WALL OR PARTITION AND ARE NOT SPECIFICALLY NOTED TO BE SURFACE MOUNTED
24. CONTRACTOR SHALL REFER TO ARCHITECTURAL PLANS FOR BUILDING DIMENSIONS, BUILDING UTILITY ENTRANCE LOCATIONS AND EXACT LOCATIONS AND DIMENSIONS OF EXITS, CANOPIES, RAMPS, DOWNSPOUTS, GRAVEL AREAS ADJACENT TO BUILDING WALLS, UTILITY ENTRANCE LOCATIONS AND BOLLARDS IN BUILDING WALKWAYS
25. CONTRACTOR SHALL VISIT THE SITE AND VERIFY ALL EXISTING CONDITIONS PRIOR TO COMMENCING CONSTRUCTION - ALL DISCREPANCIES SHALL BE NOTED AND SENT TO THE ARCHITECT WITH ADEQUATE TIME TO REVIEW PRIOR TO STARTING THAT PORTION OF THE WORK IN ORDER TO AVOID PROJECT DELAYS
26. CONTRACTOR TO PROVIDE PORTABLE FIRE EXTINGUISHERS IN ACCORDANCE WITH LOCAL JURISDICTION AND NFPA 10. MAXIMUM TRAVEL DISTANCE TO NEAREST FIRE EXTINGUISHER FROM ANY POINT IN THE BUILDING SHALL NOT EXCEED 50 FEET. EXISTING FIRE EXTINGUISHERS SHALL BE TESTED AND RE-USED IF FULLY OPERATIONAL. FIRE EXTINGUISHERS SHALL BE SIZED FOR NO LESS THAN ORDINARY HAZARD.
27. REMOVE AND REINSTALL PICTURES, TV'S, BULLETIN BOARDS ETC, PRIOR TO AND AFTER PAINTING
28. ALL REQUESTS FROM INFORMATION PROMPTED BY THE BUILDING OFFICIALS SHALL INCLUDE A COPY OF THE BUILDING OFFICIALS COMMENTS AND THE BUILDING INSPECTORS FIELD REPORT TO ENSURE AN ACCURATE AND TIMELY RESPONSE
29. CONTRACTOR AND SUBCONTRACTOR SHALL ALL BE LICENSED TO PERFORM THEIR REQUESTED DUTIES AS REQUIRED IN ACCORDANCE WITH LOCAL STANDARDS
30. CONTRACTOR SHALL COMPARE STRUCTURAL SECTIONS WITH ARCHITECTURAL SECTIONS AND REPORT ANY DISCREPANCY TO THE ARCHITECT PRIOR TO FABRICATION OR INSTALLATION OF STRUCTURAL MEMBERS

BAKER LPA GROUP, LLP
ARCHITECTS, ENGINEERS, PLANNERS, ENERGY, INFORMATION TECHNOLOGY, AND SUSTAINABILITY
Michael Baker INTERNATIONAL
11 NORTH WATER STREET
SUITE 14290 MOBILE, AL 36602

Consultant

STATE OF ALABAMA
DOUGLAS B. THOMPSON
7906
MOBILE, ALABAMA
REGISTERED ARCHITECT
04.08.26

SEAL

NO.	DATE	DESCRIPTION

REVISIONS

STRICKLAND YOUTH CENTER COURTROOM RENOVATION
2315 COSTARIDES ST
MOBILE, AL 36617

ARCHITECTURAL GENERAL NOTES, MATERIAL AND ANNOTATION LEGEND

Project Number: 214010
Date: 07-08-2026
Scale: AS NOTED
Sheet # A-001

ISSUED FOR BID

© Baker 2026

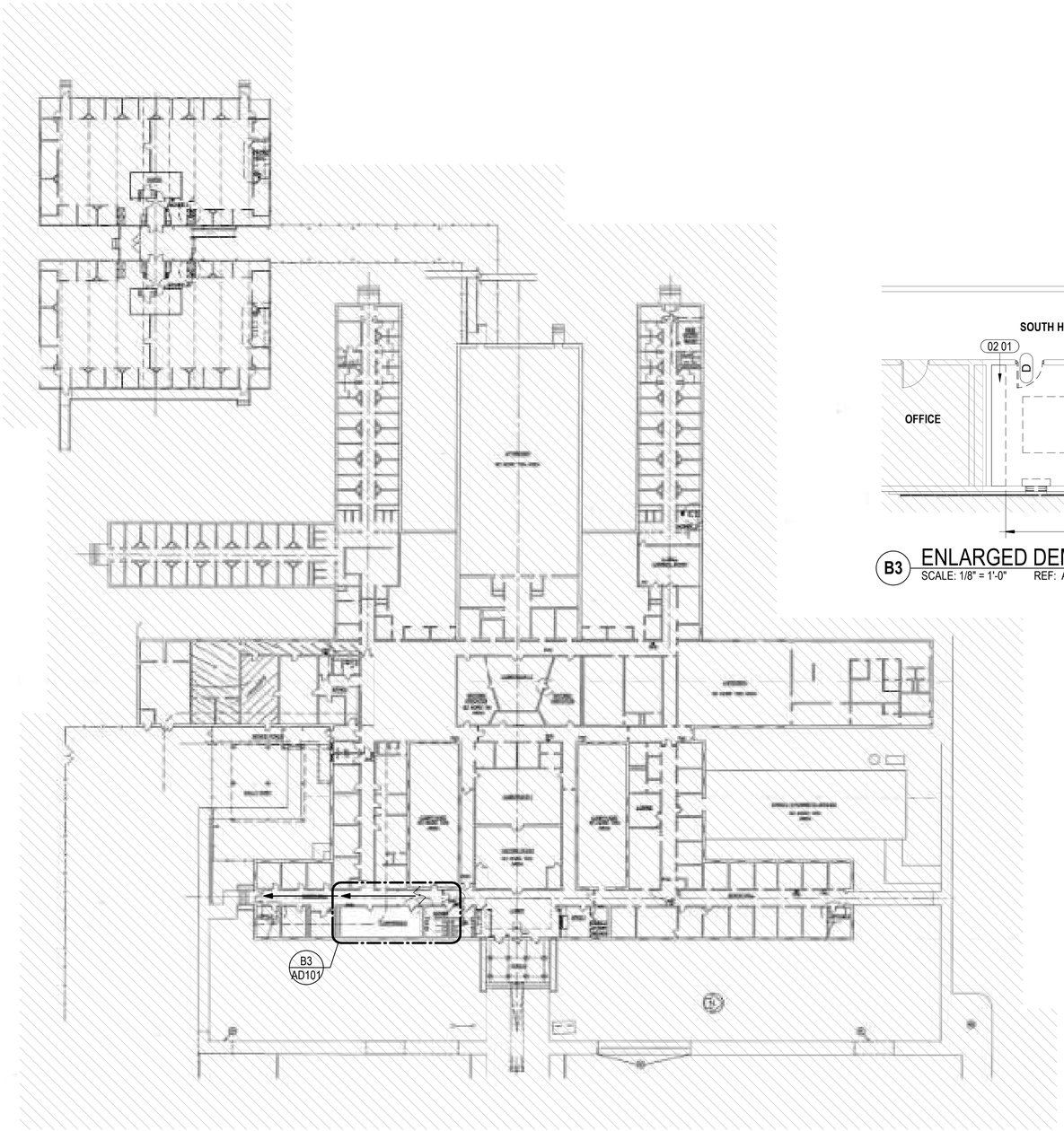

D1 OVERALL DEMOLITION FLOOR PLAN

N

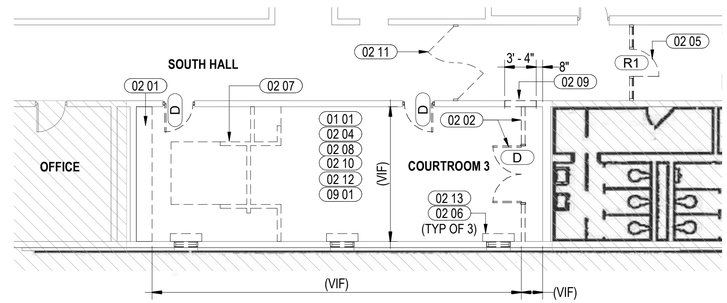

B3 ENLARGED DEMOLITION PLAN
SCALE: 1/8" = 1'-0" REF: A-620

DEMOLITION LEGEND

- NOT IN CONTRACT
- WORK AREAS
- TO BE REMOVED
- PATH OF MATERIAL REMOVAL
- D — EXISTING DOOR TO BE DEMOLISHED
- R# — EXISTING DOOR TO BE RELOCATED

DEMOLITION NOTES

1 PRIOR TO COMMENCEMENT OF DEMOLITION WORK, CONTRACTOR IS TO INSPECT ALL AREAS IN WHICH WORK WILL BE PERFORMED. DOCUMENT THE CONDITION OF SURROUNDING PROPERTIES WHICH COULD BE MISCONSTRUED AS DAMAGE RESULTING FROM DEMOLITION WORK AND FILE WITH OWNER RESIDENT ENGINEER PRIOR TO STARTING WORK.

2 ALL DEMOLITION WORK IS TO BE DONE IN COMPLIANCE WITH ALL APPLICABLE CODES, LAWS AND REGULATIONS.

3 ALL DEMOLITION WORK REQUIRED IS NOT LIMITED TO THAT INDICATED ON THESE PLANS. THE INTENT IS TO REMOVE ALL MECHANICAL, ELECTRICAL, PLUMBING, COMMUNICATIONS, AND ARCHITECTURAL ITEMS AS INDICATED AND AS NECESSARY TO FACILITATE NEW CONSTRUCTION.

4 ALL EQUIPMENT TO REMAIN THE PROPERTY OF THE OWNER. ALL EQUIPMENT THE OWNER DOES NOT WANT TO KEEP AND STORE SHALL BECOME THE PROPERTY OF THE CONTRACTOR.

5 CONDITIONS OF STRUCTURES: OWNER ASSUMES NO RESPONSIBILITY FOR ACTUAL CONDITION OF ITEMS OR STRUCTURES TO BE DEMOLISHED.

6 CONTRACTOR TO PROTECT ADJACENT AREAS FROM DUST, EXCESSIVE NOISE OR DISRUPTION OF OPERATION.

7 IF HAZARDOUS MATERIALS ARE ENCOUNTERED DURING DEMOLITION OPERATIONS, THE CONTRACTOR IS TO STOP WORK IN THE AREA IMMEDIATELY, AND INFORM THE OWNER AND ARCHITECT FOR FUTURE DIRECTION

8 NOTIFY ARCHITECT IF ANY EXISTING ITEM THAT CONFLICTS WITH THE INTENDED FINAL PRODUCT IS NOT SPECIFICALLY CALLED OUT FOR DEMOLITION. CONTRACTOR IS TO NOTIFY ARCHITECT OF ANY DISCREPANCIES IN THE DOCUMENTS AND FIELD CONDITIONS BEFORE PROCEEDING WITH DEMOLITION AND/OR CONSTRUCTION.

9 PATCH ALL INTERIOR AND EXTERIOR WALL PENETRATIONS TO MATCH EXISTING ADJACENT FINISHES. FINISH SHALL BE FLUSH WITH ADJACENT CONSTRUCTION.

10 PROTECT EXISTING STRUCTURES, FINISHES, UTILITIES AND OTHER ITEMS SCHEDULED TO REMAIN. AREAS THAT ARE DAMAGED BY SELECTIVE DEMOLITION SHALL BE PATCHED AND REPAIRED AND FINISHED OR REPLACED TO MATCH EXISTING ADJACENT SURFACES AT NO ADDITIONAL COST TO THE OWNER.

11 PROVIDE TEMPORARY BARRICADES AND OTHER FORMS OF PROTECTION AS REQUIRED TO PROTECT OWNER'S PERSONNEL AND GENERAL PUBLIC FROM INJURY DUE TO DEMOLITION WORK.

12 REMOVE ALL EXISTING MECHANICAL DUCTS, PLUMBING, ELECTRICAL, COMMUNICATIONS, AND ANY OTHER ITEMS THAT ARE AFFECTED AND RENDERED OBSOLETE BY NEW MECHANICAL, PLUMBING AND ELECTRICAL WORK. CONTRACTOR SHALL VACUUM CLEAN THE AREA PRIOR TO INSTALLATION OF ANY NEW ITEM.

13 SHOULD HIDDEN FIELD CONDITIONS REQUIRE MODIFICATIONS TO THE LAYOUT, THE CONTRACTOR SHALL COORDINATE WITH THE ARCHITECT.

14 COORDINATE WITH MECHANICAL, ELECTRICAL, PLUMBING, AND COMMUNICATIONS DRAWINGS AND SCOPES OF WORK FOR ADDITIONAL DEMOLITION REQUIREMENTS.

15 ALL ABANDONED MECHANICAL, PLUMBING, AND ELECTRICAL PIPING IS TO BE REMOVED TO A POINT BELOW EXISTING CONCRETE FLOOR SLAB, BEHIND WALLS AND AS CLOSE TO THE CEILING DECK AS POSSIBLE AND MADE SAFE BY CAPPING.

16 ANY WORK WHICH INTERFERES WITH THE OWNER'S OPERATIONS OF THE SURROUNDING AREA AND ANY INTERRUPTION OF SERVICES, INCLUDING THE SHUTDOWN OF UTILITIES, SHALL BE COORDINATED WITH, AND PERFORMED AT A TIME APPROVED BY THE VA RESIDENT ENGINEER.

17 CLEAN UP AND REMOVAL OF DEBRIS FROM SITE AND SURROUNDING AREAS SHALL BE PERFORMED DAILY.

18 HVAC FILTERS SHALL BE REPLACED AT ALL EXISTING UNITS IN AREA OF WORK AT THE COMPLETION OF THE PROJECT.

KEYNOTES

01 01	CONTRACTOR IS TO COORDINATE WITH THE OWNER FOR THE REMOVAL AND/OR PROTECTION OF ALL ITEMS IN COURTROOM AND CLOSET BEFORE AND AFTER CONSTRUCTION.
02 01	REMOVE EXISTING FULL HEIGHT SHELVING AND ASSOCIATED FRAMING. SHELVING SHALL REMAIN PROPERTY OF OWNER AND TURNED OVER FOR STORAGE.
02 02	REMOVE EXISTING CLOSET PARTITION AND DOUBLE DOOR, FRAME, AND ASSOCIATED HARDWARE.
02 04	REMOVE EXISTING CEILING TILE/GRID AND ASSOCIATED FIXTURES. REFER TO MECHANICAL, ELECTRICAL, AND PLUMBING DRAWINGS FOR ADDITIONAL INFORMATION.
02 05	EXISTING STOREFRONT SECURITY DOOR TO BE REMOVED AND RELOCATED PER MODIFICATION PLAN ON DRAWING A-110. REFER TO ELECTRICAL DRAWINGS FOR ADDITIONAL INFORMATION.
02 06	REMOVE EXISTING FAN COIL UNITS. REFER TO ELECTRICAL AND MECHANICAL DRAWINGS FOR ADDITIONAL INFORMATION.
02 07	REMOVE EXISTING KNEEWALLS, PODIUMS, AND ASSOCIATED FRAMING. REFER TO ELECTRICAL DRAWINGS FOR ADDITIONAL INFORMATION.
02 08	REMOVE EXISTING FLOORING DOWN TO SUBSTRATE IN EXISTING COURTROOM. CLEAN, AND REPAIR CONCRETE AS REQUIRED IN PREPARATION OF NEW LVT FLOORING.
02 09	REMOVE EXISTING CMU, FURRING, AND FINISHES TO THE EXTENT SHOWN ON PLAN IN PREPARATION OF NEW DOOR AND FRAME.
02 10	REFER TO ARCHITECTURAL, MECHANICAL, AND ELECTRICAL DRAWINGS FOR REMOVAL, RELOCATION, AND INSTALLATION OF NEW CEILING FIXTURES.
02 11	EXISTING DOORS AND FRAME TO BE REMOVED. DOORS SHALL REMAIN PROPERTY OF OWNER AND TURNED OVER FOR STORAGE.
02 12	REMOVE ALL EXISTING FINISHES DOWN TO EXISTING FRAMING OR MASONRY.
02 13	EXISTING WINDOWS AND ASSOCIATED FRAMING TO BE REMOVED.
09 01	IF EXISTING WALL CORE IS MASONRY, PROVIDE 7/8" HAT CHANNEL W/ 5/8" GYPSUM BOARD. IF EXISTING WALL CORE IS METAL STUD, PROVIDE 5/8" GYPSUM BOARD.

0 4' - 0" 8' - 0" 16' - 0"
SCALE: 1/8" = 1' - 0"

BAKER LPA GROUP, LLP
A CONSULTING ARCHITECTS AND ENGINEERS, A DIVISION OF MICHAEL BAKER INTERNATIONAL, INC. AND AFFILIATED
Michael Baker
INTERNATIONAL
11 NORTH WATER STREET
SUITE 14290 MOBILE, AL 36602

Consultant

STATE OF ALABAMA
DOUGLAS B. THOMPSON
7900
MOBILE, ALABAMA
REGISTERED ARCHITECT
04.08.26

SEAL

REVISIONS

NO.	DATE	DESCRIPTION

STRICKLAND YOUTH CENTER COURTROOM RENOVATION
2315 COSTARIDES ST
MOBILE, AL 36617

ARCHITECTURAL - DEMOLITION PLAN

Project Number: 214010
Date: 07-08-2026
Scale: AS NOTED
Sheet # AD101

ISSUED FOR BID

© Baker 2026

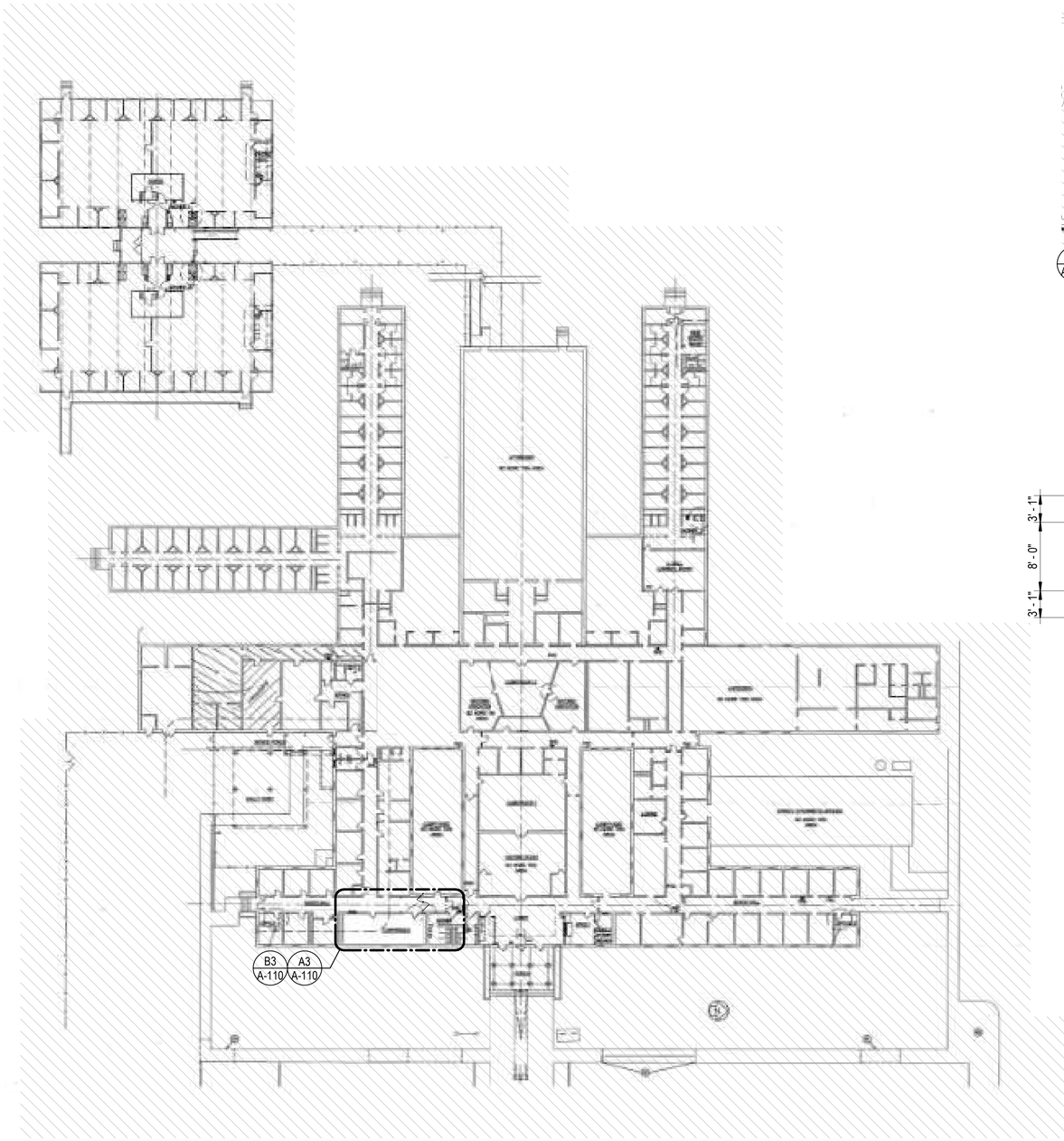

D1 OVERALL MODIFICATION FLOOR PLAN

N

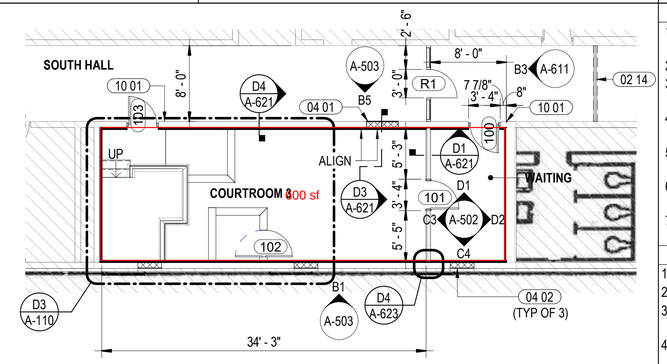

A3 ENLARGED MODIFICATION PLAN

SCALE: 1/8" = 1'-0" REF: A-110

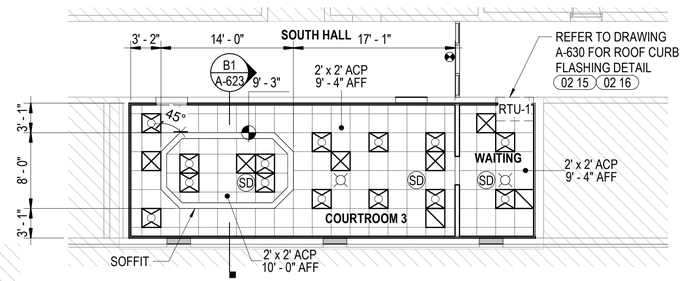

B3 ENLARGED REFLECTED CEILING PLAN

SCALE: 1/8" = 1'-0" REF: A-110

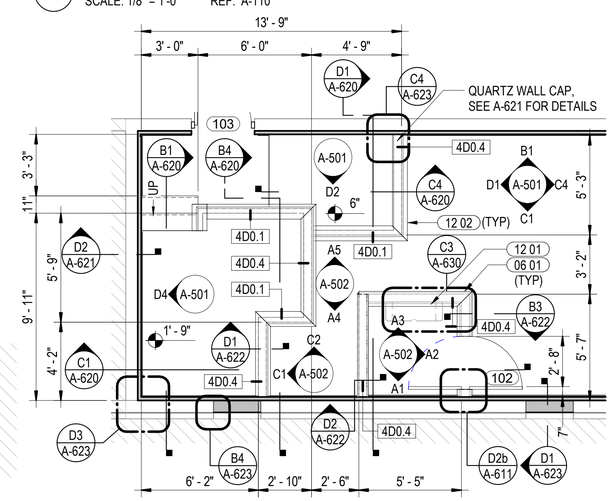

D3 ENLARGED PODIUM PLAN

SCALE: 1/4" = 1'-0" REF: A-110

NOTES - FLOOR PLANS

1 REFER TO SHEET A-001 FOR ARCHITECTURAL GENERAL NOTES, & ANNOTATION LEGEND
2 REFER TO DRAWING A-601 FOR PARTITION TYPES
3 REFER TO ENLARGED PLANS AND INTERIOR ELEVATIONS FOR ADDITIONAL INFORMATION
4 REFER TO MECHANICAL, ELECTRICAL, AND TELECOMM SHEETS FOR EQUIPMENT LOCATIONS AND REQUIREMENTS.
5 ALL DIMENSIONS SHOWN ARE TO FACE OF WALL (LEFT TO RIGHT, BOTTOM TO TOP)- TYPICAL UNLESS NOTED OTHERWISE.
6 ALL DOORS TO BE INSTALLED 4" FROM HINGE SIDE OF WALL - TYPICAL UNLESS NOTED OR DIMENSIONED OTHERWISE.
7 DIMENSIONS MARKED AS "CLEAR" DICTATES THE CLEAR DIMENSION FROM FINISH TO FINISH.

NOTES - RCP

1 ALL ELEVATIONS ARE ABOVE FINISHED FLOOR.
2 REFER TO ELECTRICAL DRAWINGS FOR POWER AND LIGHTING INFORMATION
3 REFER TO MECHANICAL DRAWINGS FOR VENTILATION AND HEATING VENTILATION AND AIR CONDITIONING INFORMATION
4 ALL CEILING GRIDS TO BE CENTERED IN ROOMS - TYPICAL UNLESS NOTED OR DIMENSIONED OTHERWISE
5 THE SUSPENDED CEILING SYSTEM, MECHANICAL DUCTWORK AND LIGHTING FIXTURES SHALL BE POSITIVELY ATTACHED TO THE STRUCTURE ABOVE
6 REFER TO DRAWING A-630 FOR CEILING DETAILS.

KEYNOTES

02 14 PATCH/REPAIR EXISTING FLOORING TO LIKE KIND CONDITION WHERE EXISTING STOREFRONT PARTITION IS REMOVED.
02 15 CONTRACTOR TO FIELD VERIFY EXISTING ROOFING ASSEMBLY INCLUDING STRUCTURE, DECKING, INSULATION, COVER BOARD, AND ROOFING MATERIAL.
02 16 ROOFING ASSEMBLY IS ASSUMED TO BE MODIFIED BITUMEN. CONTRACTOR SHALL NOTIFY PROJECT ARCHITECT IF FOUND TO BE A DIFFERENT ROOFING TYPE.
04 01 INFILL EXISTING DOOR OPENING W/ NEW 8" CMU PAINTED TO MATCH EXISTING. REFER TO DRAWING A-622 FOR ADDITIONAL INFORMATION.
04 02 INFILL EXISTING WINDOW OPENINGS W/ NEW 4" CMU, 3 5/8" METAL STUDS AND R-15 WOOL INSULATION. NEW CMU TO RECEIVE STUCCO FINISH PAINTED TO MATCH EXISTING EXTERIOR.
06 01 NEW WOOD PANELING AND TRIM. REFER TO INTERIORS FOR FINISH INFORMATION.
10 01 PROVIDE NEW SIGNAGE @ COURTROOM, WAITING ROOM, AND SOUTH HALL (COLOR TO MATCH EXISTING DOOR FRAMES). REFER TO PLAN FOR ADDITIONAL INFORMATION.
12 01 FOLD DOWN WRITING SURFACE. REFER TO DRAWING A-630 FOR DETAILS.
12 02 ALL QUARTZ AGGLOMERATE WALL TOPS TO HAVE FULL BULLNOSE EDGES.

LEGEND

NOT IN CONTRACT
WORK AREAS
PATH OF MATERIAL REMOVAL
NEW DOOR, REF SCHEDULE
RELOCATED DOOR AND HARDWARE
5'-0".
5'-0".
5'-0".
ACCESSIBILITY CLEARANCE

RCP LEGEND

2'x2' ACOUSTICAL CEILING PANEL
MECHANICAL DIFFUSER SEE M-SERIES
MECHANICAL GRILLE SEE M-SERIES
2x2 LIGHT FIXTURES SEE E-SERIES
ILLUMINATED EXIT SIGN SEE E-SERIES
RTU-1 ROOFTOP HVAC UNIT SEE M-SERIES
VISUAL ALARM/HORN STROBE SEE E-SERIES
SD SMOKE DETECTOR SEE E-SERIES

0 4' - 0" 8' - 0" 16' - 0"
SCALE: 1/8" = 1' - 0"

0 2' - 0" 4' - 0" 8' - 0"
SCALE: 1/4" = 1' - 0"

BAKER LPA GROUP, LLP
ARCHITECTS, ENGINEERS, PLANNERS, ENERGY, ENVIRONMENTAL AND SUSTAINABILITY
Michael Baker
INTERNATIONAL
11 NORTH WATER STREET
SUITE 14290 MOBILE, AL 36602

Consultant

STATE OF ALABAMA
DOUGLAS B. THOMPSON
7906
MOBILE, ALABAMA
REGISTERED ARCHITECT
04.08.26

SEAL

NO.	DATE	DESCRIPTION

REVISIONS

STRICKLAND YOUTH CENTER COURTROOM RENOVATION
2315 COSTARIDES ST
MOBILE, AL 36617

ARCHITECTURAL - MODIFICATION PLAN

Project Number: 214010
Date: 07-08-2026
Scale: AS NOTED
Sheet # A-110

ISSUED FOR BID

© Baker 2026

KEYNOTES

06 02	CONTRACTOR AND MILLWORK SUB-CONTRACTOR SHALL COORDINATE LOCATIONS OF PANELING WITH OWNER PROVIDED FURNISHINGS.
06 03	CONTRACTOR TO REFER TO SPEC SECTION 064214, STILE AND RAIL WOOD PANELING FOR SPECIES, STAINING, AND PATTERNING NOTES FOR WOODWORK AT WALLS AND KNEE WALLS.
06 04	MILLWORK SUB-CONTRACTOR IS TO COORDINATE ALIGNMENT AND CENTERING OF ALL DEVICE PLATES PENETRATING PANELING WITH PROJECT ARCHITECT.
06 05	CONCEAL ALL DEVICE PLATES WITHIN WALLS BELOW EDGES OF OWNER PROVIDED FURNITURE.

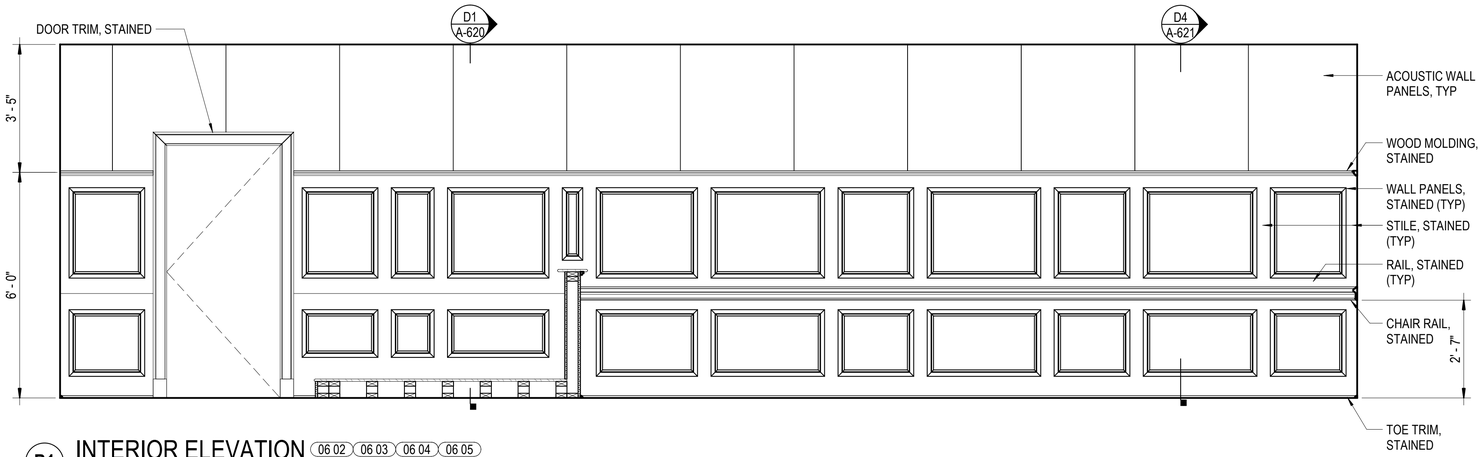

B1 INTERIOR ELEVATION (06 02) (06 03) (06 04) (06 05)
SCALE: 1/2" = 1'-0" REF: A-110

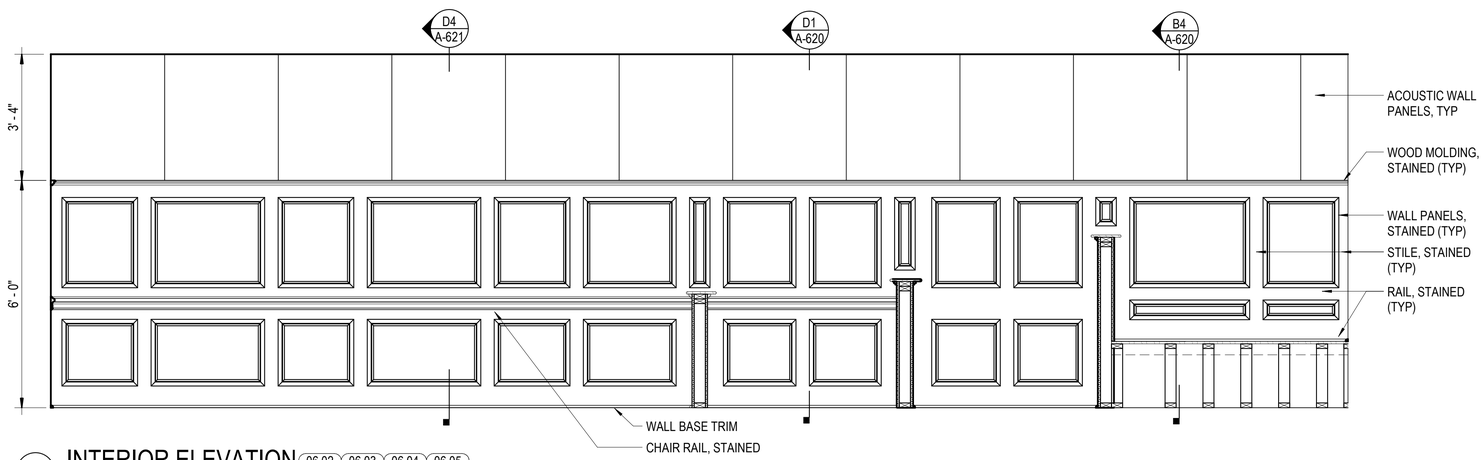

C1 INTERIOR ELEVATION (06 02) (06 03) (06 04) (06 05)
SCALE: 1/2" = 1'-0" REF: A-110

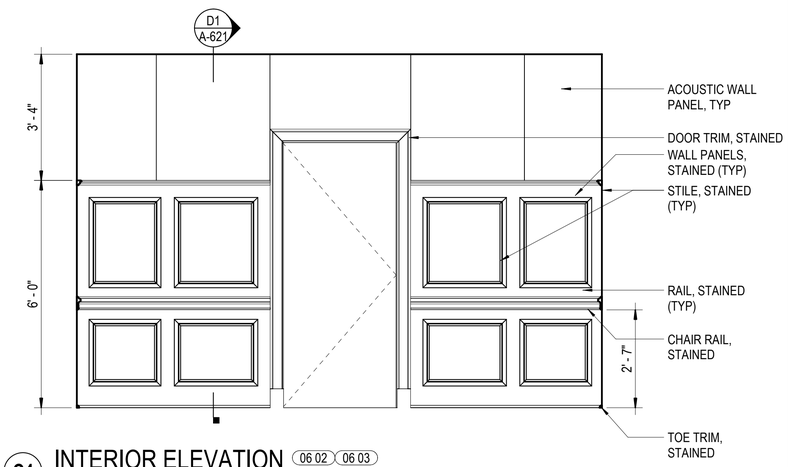

C4 INTERIOR ELEVATION (06 02) (06 03)
SCALE: 1/2" = 1'-0" REF: A-110

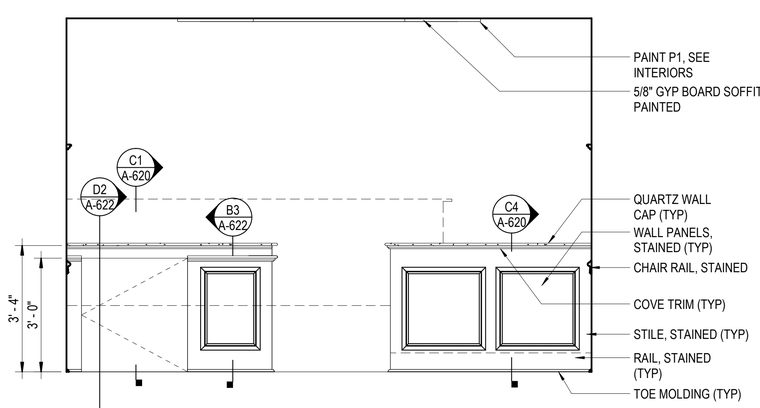

D1 INTERIOR ELEVATION (06 02) (06 03)
SCALE: 1/2" = 1'-0" REF: A-110

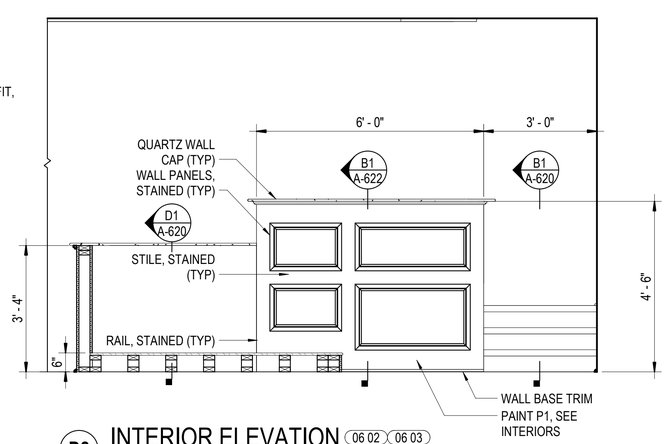

D2 INTERIOR ELEVATION (06 02) (06 03)
SCALE: 1/2" = 1'-0" REF: A-110

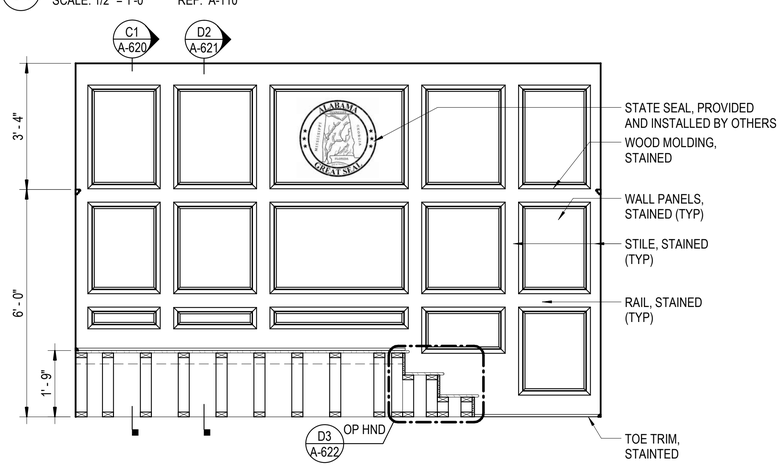

D4 INTERIOR ELEVATION (06 02) (06 03)
SCALE: 1/2" = 1'-0"

0 1' - 0" 2' - 0" 4' - 0"
SCALE: 1/2" = 1' - 0"

BAKER LPA GROUP, LLP
ARCHITECTS INTERIOR DESIGNERS ENGINEERS
Michael Baker INTERNATIONAL
11 NORTH WATER STREET
SUITE 14290 MOBILE, AL 36602

Consultant

STATE OF ALABAMA
DOUGLAS B. THOMPSON
7906
MOBILE, ALABAMA
REGISTERED ARCHITECT
04.08.26

SEAL

NO.	DATE	DESCRIPTION

REVISIONS

STRICKLAND YOUTH CENTER COURTROOM RENOVATION
2315 COSTARIDES ST
MOBILE, AL 36617

INTERIOR ELEVATIONS

Project Number: 214010
Date: 07-08-2026
Scale: AS NOTED
Sheet # A-501

ISSUED FOR BID

© Baker 2026

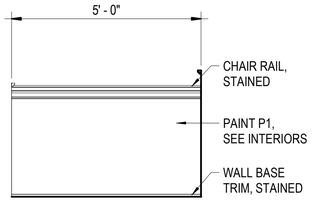

A1 INTERIOR ELEVATION
SCALE: 1/2" = 1'-0" REF: A-110

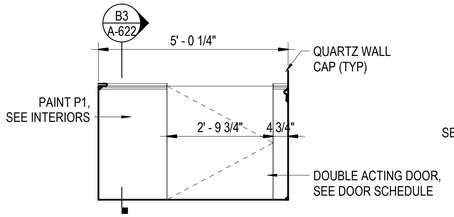

A2 INTERIOR ELEVATION
SCALE: 1/2" = 1'-0" REF: A-110

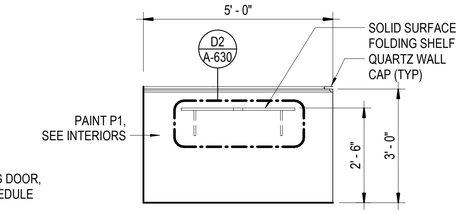

A3 INTERIOR ELEVATION
SCALE: 1/2" = 1'-0" REF: A-110

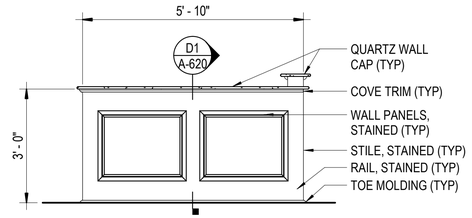

A4 INTERIOR ELEVATION - WITNESS STAND
SCALE: 1/2" = 1'-0" REF: A-110

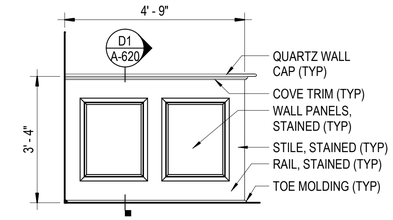

A5 INTERIOR ELEVATION - CLERK PODIUM
SCALE: 1/2" = 1'-0" REF: A-110

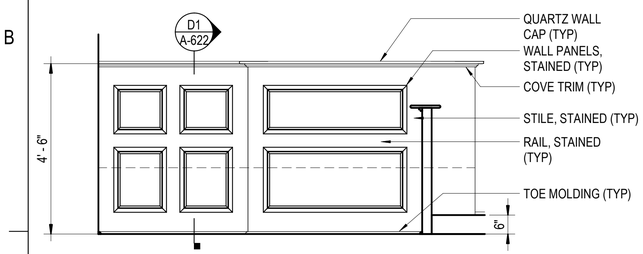

C1 INTERIOR ELEVATION
SCALE: 1/2" = 1'-0" REF: A-110

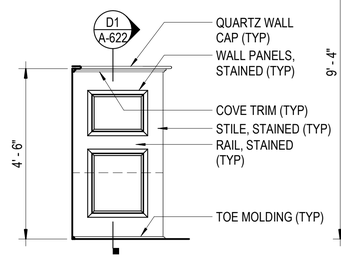

C2 INTERIOR ELEVATION
SCALE: 1/2" = 1'-0" REF: A-110

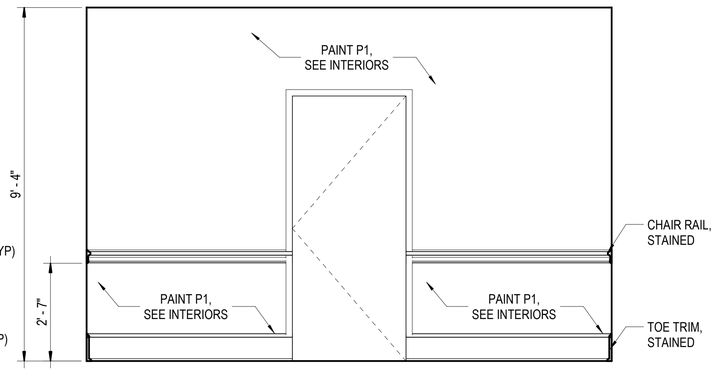

C3 INTERIOR ELEVATION
SCALE: 1/2" = 1'-0" REF: A-110

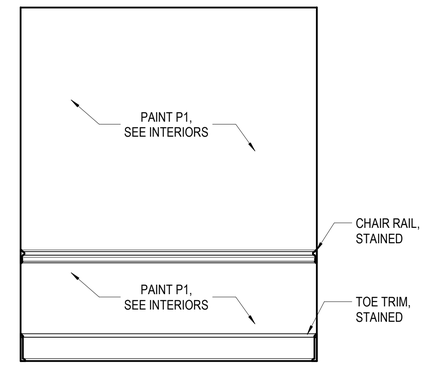

C4 INTERIOR ELEVATION
SCALE: 1/2" = 1'-0" REF: A-110

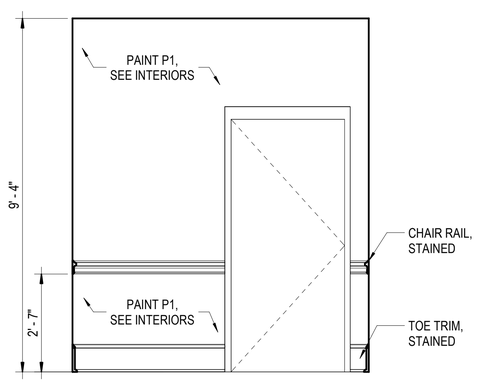

D1 INTERIOR ELEVATION
SCALE: 1/2" = 1'-0" REF: A-110

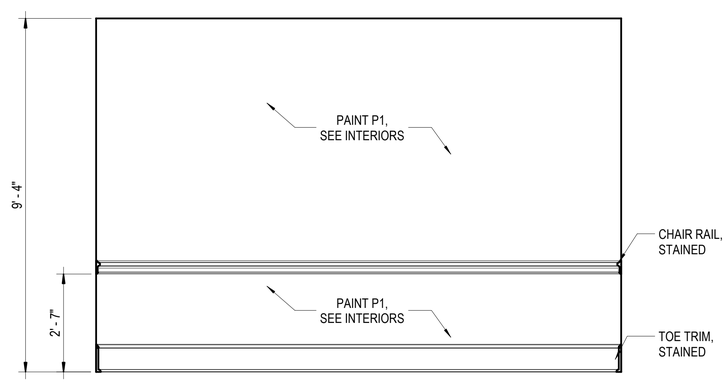

D2 INTERIOR ELEVATION
SCALE: 1/2" = 1'-0" REF: A-110

0 1' - 0" 2' - 0" 4' - 0"
SCALE: 1/2" = 1' - 0"

BAKER LPA GROUP, LLP
A CONTINUALLY INVITED ENTITY OF MICHAEL BAKER INTERNATIONAL AND AFFILIATES
Michael Baker INTERNATIONAL
11 NORTH WATER STREET
SUITE 14290 MOBILE, AL 36602

Consultant

STATE OF ALABAMA
DOUGLAS B. THOMPSON
7901
MOBILE, ALABAMA
REGISTERED ARCHITECT
04.08.26

SEAL

NO.	DATE	DESCRIPTION

REVISIONS

STRICKLAND YOUTH CENTER COURTROOM RENOVATION
2315 COSTARIDES ST
MOBILE, AL 36617

INTERIOR ELEVATIONS

Project Number: **214010**
Date: 07-08-2026
Scale: **AS NOTED**
Sheet # A-502

ISSUED FOR BID

© Baker 2026

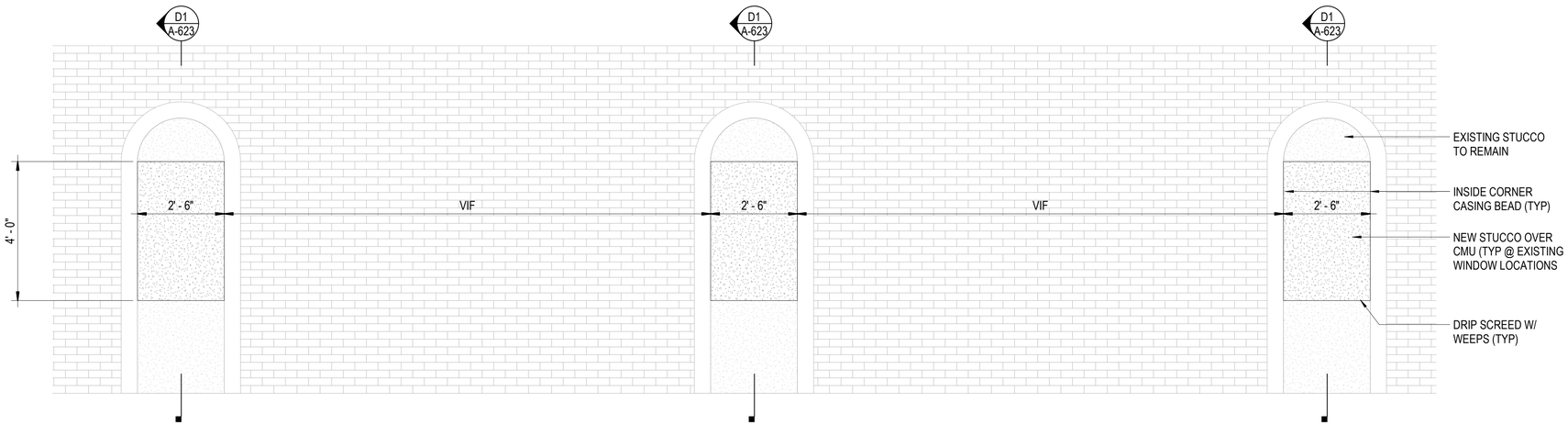

B1 EXTERIOR ELEVATION
SCALE: 1/2" = 1'-0" REF: A-110

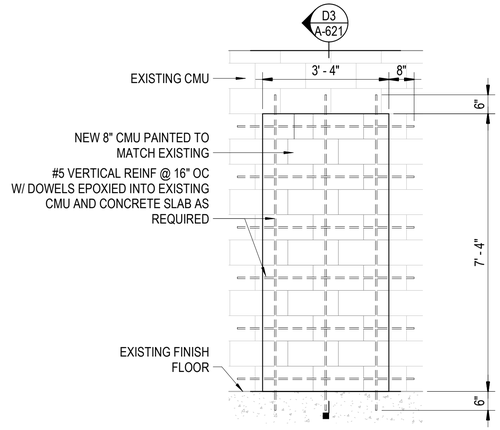

B5 CMU INFILL ELEVATION
SCALE: 1/2" = 1'-0" REF: A-110

0 1' - 0" 2' - 0" 4' - 0"
SCALE: 1/2" = 1' - 0"

BAKER LPA GROUP, LLP
A CONFORMED PARTNERSHIP BETWEEN MICHAEL BAKER INTERNATIONAL AND STRUCTURE
Michael Baker
INTERNATIONAL
11 NORTH WATER STREET
SUITE 14290 MOBILE, AL 36602

Consultant

STATE OF ALABAMA
DOUGLAS B. THOMPSON
7901
MOBILE, ALABAMA
REGISTERED ARCHITECT
04.08.26

SEAL

NO.	DATE	DESCRIPTION

REVISIONS

STRICKLAND YOUTH CENTER COURTROOM RENOVATION

2315 COSTARIDES ST
MOBILE, AL 36617

INTERIOR/EXTERIOR ELEVATIONS

Project Number: **214010**
Date: 07-08-2026
Scale: **AS NOTED**
Sheet # A-503

ISSUED FOR BID

© Baker 2026

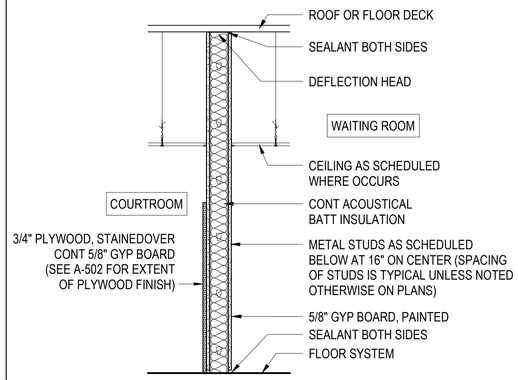

PARTITION TYPE 1A0

TYPE	FIRE RATED	CORE WIDTH	OVERALL WIDTH	STC RATED	UL LISTING	STC TEST
1A0.3	NON-RATED	3 5/8"	2 1/4"	NON-RATED	N/A	N/A
1A0.3c	NON-RATED	3 5/8"	5 5/8"	45	N/A	NGC 2391

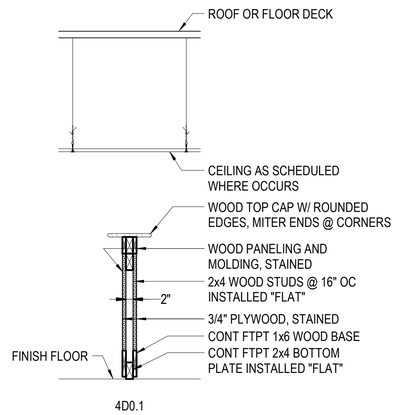

4D0.1

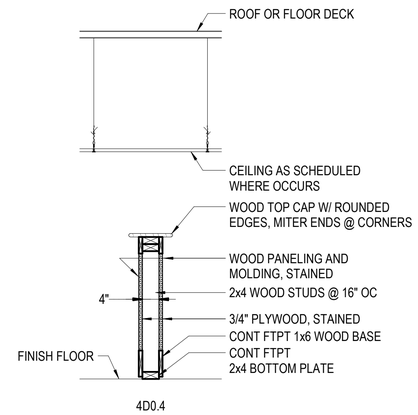

4D0.4

PARTITION TYPE 4D0

TYPE	FIRE RATING	CORE WIDTH	OVERALL WIDTH	UL LISTING
4D0.1	NON-RATED	2x4 (1 1/2")	3"	N/A
4D0.4	NON-RATED	2x4 (3 1/2")	5"	N/A

LEGEND - PARTITION TYPES

1 A 2 . 3 a
- CORE TYPE
- CORE HEIGHT
- RATING
- STC CLASSIFICATION
- CORE WIDTH

CORE TYPE
- 1 METAL STUD WALL
- 2 METAL STUD SHAFT WALL
- 3 METAL STUD (1 SIDED GYP BD)
- 4 WOOD STUD WALL
- 5 WOOD STUD (1 SIDED GYP BD)
- 6 CMU
- 7 CONCRETE
- 8 FURRING

CORE HEIGHT
- A FULL HEIGHT (TO UNDERSIDE OF STRUCTURE)
- B 6" ABOVE HIGHEST ADJACENT CEILING
- C TO CEILING
- D (D-Z) USER DEFINED (SPECIAL CONDITIONS)

RATING
- 0 NON-RATED
- 1 1 HOUR
- 2 2 HOUR
- 3 3 HOUR
- 4 4 HOUR
- H 1/2 HOUR
- S SMOKE RATED

CORE WIDTH
- .1 METAL STUD (1 5/8")
- .2 METAL STUD (2 1/2")
- .3 METAL STUD (3 5/8")
- .4 METAL STUD (4") WOOD STUD (3 1/2") CMU/CONCRETE (3 5/8")
- .6 METAL STUD (6") WOOD STUD (5 1/2") CMU/CONCRETE (5 5/8")
- .8 METAL STUD (8") WOOD STUD (7 1/4") CMU/CONCRETE (7 5/8")
- .10 METAL STUD (10") WOOD STUD (9 1/4") CMU/CONCRETE (9 5/8")
- .12 WOOD STUD (11 1/4") CMU/CONCRETE (11 5/8")

STC CLASSIFICATION
- .a STC 35
- .b STC 40
- .c STC 45
- .d STC 50
- .e STC 55

BAKER LPA GROUP, LLP
A CONFORMED PARTNERSHIP BETWEEN MICHAEL BAKER INTERNATIONAL AND LPA INC.
Michael Baker INTERNATIONAL
11 NORTH WATER STREET
SUITE 14290 MOBILE, AL 36602

Consultant

STATE OF ALABAMA
DOUGLAS B. THOMPSON
7901
MOBILE, ALABAMA
REGISTERED ARCHITECT
04.08.26

SEAL

REVISIONS

NO.	DATE	DESCRIPTION

STRICKLAND YOUTH CENTER COURTROOM RENOVATION

2315 COSTARIDES ST
MOBILE, AL 36617

PARTITION TYPES

Project Number: **214010**

Date: 07-08-2026

Scale: **AS NOTED**

Sheet # A-601

ISSUED FOR BID

© Baker 2026

DOOR SCHEDULE

DOOR NUMBER	SIZE HEIGHT	SIZE WIDTH	SIZE THICKNESS	DOOR TYPE	DOOR MATERIAL	DOOR FINISH	FRAME TYPE	FRAME FINISH	DETAILS HEAD	DETAILS JAMB	DETAILS THRESHOLD	RATING FIRE	RATING STC	HARDWARE SET	COMMENTS
100	6' - 8"	3' - 0"	1 3/4"	D1M	WDSC	STN	F1	PTD	C3/A-611	C4/A-611	D3a/A-611	60 MIN	50	01	BEST SFIC W/ 7 PIN CORE, INTERIOR PUSH BUTTON
101	7' - 0"	3' - 0"	1 3/4"	D1	WDSC	STN	F2	PTD	C1/A-611	C2/A-611	D3b/A-611	60 MIN	50	01	BEST SFIC W/ 7 PIN CORE, INTERIOR PUSH BUTTON
102	3' - 0"	2' - 9 5/8"	1 3/4"	D2	WDSC	STN	N/A	STN	-	D2b/A-611	-	-	-	02	DOUBLE ACTING, SEE ELEVATION FOR HINGE SPACING
103	6' - 8"	3' - 0"	1 3/4"	D1M	WDSC	STN	F1	PTD	C3/A-611	C4/A-611	D3a/A-611	60 MIN	50	01	BEST SFIC W/ 7 PIN CORE, INTERIOR PUSH BUTTON
R1	7' - 0"	3' - 0"	1 3/4"	D3	AFE	GL	F3	AL	D1/A-611	D2a/A-611	D1/A-611	-	-	03	EXISTING HARDWARE

LEGEND - DOOR FRAME

TYPE	DESCRIPTION
-	NONE
AL	ALUMINUM
HM	HOLLOW METAL

LEGEND - DOOR LEAF

TYPE	DESCRIPTION
AFE	ALUMINUM-FRAMED ENTRANCE
WDSC	WOOD FLUSH (SOLID CORE)

NOTES - DOORS

1. OPENING SIZE IS EQUAL TO NET OPENING - ROUGH OPENING IS EQUAL TO OPENING SIZE AND FRAME DIMENSION
2. INSPECT, SERVICE, AND ADJUST ALL DOORS FOR LEVEL AND PLUMB TO ENSURE SMOOTH OPERATION
3. REPLACE HARDWARE ON EXISTING DOORS AS SCHEDULED
4. UNLESS NOTED OTHERWISE, PROVIDE DOOR STOPS FOR ALL DOORS THAT ARE NOT EQUIPPED WITH A DOOR CLOSER
5. PROVIDE SEALANT ALONG PERIMETER OF ALL DOOR FRAMES
6. CLEAN AND STAIN ALL DOORS. REFER TO SPECIFICATIONS
7. DOORS SHALL BE PROVIDED WITH A LEVEL FLOOR OR LANDING - ALL THRESHOLD PROVIDED SHALL HAVE A MAXIMUM OF 12mm ABOVE THE FLOOR OR LANDING PER IBC
8. THE DETAILS INDICATED ON DRAWINGS REFLECT DESIGN INTENT ONLY - ATTACHMENTS AND SEALANT DETAILS ARE SCHEMATIC AND TOGETHER WITH SPECIFICATIONS AND PROFILES SHOWN ARE INTENDED TO ESTABLISH THE PERFORMANCE REQUIREMENTS AND MATERIAL QUALITIES REQUIRED - DETAILS NOT SHOWN SHALL BE SIMILAR IN CHARACTER TO THOSE DETAILED - WHERE SPECIFIC DIMENSION, DETAIL OR INTENT CANNOT BE DETERMINED, OR ARE NOT CLEARLY DEFINED, THE ARCHITECTS CLARIFICATION SHALL BE REQUESTED BEFORE PROCEEDING WITH THAT PORTION OF THE WORK. THE CONTRACTOR SHALL DEVELOP FINAL DETAILS TO ACCOMMODATE THE FABRICATION (SHOP DRAWINGS), ERECTION AND INSTALLATION OF THE WORK IN ACCORDANCE WITH THE DESIGN INTENT SHOWN
9. THE MAXIMUM EFFORT TO OPERATE DOORS APPLIED AT RIGHT ANGLES TO HINGED DOORS OR AT THE CENTER PLANE SLIDING DOORS SHALL COMPLY WITH THE LATEST CODE REQUIREMENTS
10. REFER TO COURSE OF ACTION (COA) CODE FOR GENERAL SCOPE OF DOOR REHABILITATION
11. VERIFY ALL DOOR AND FRAME SIZES IN FIELD PRIOR TO RENOVATING, FABRICATING, OR ORDERING NEW COMPONENTS

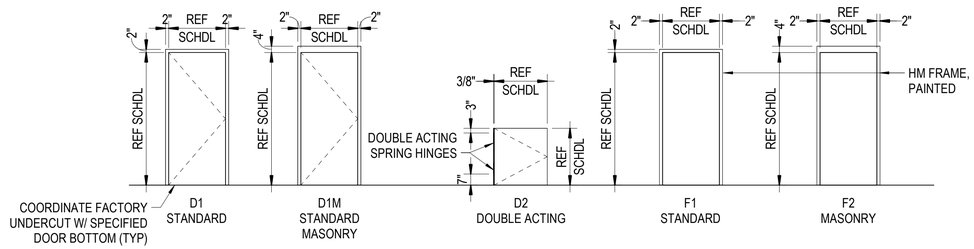

DOOR & FRAME ELEVATIONS

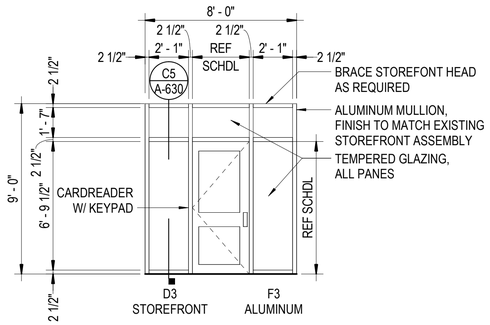

B3 STOREFRONT ELEVATION

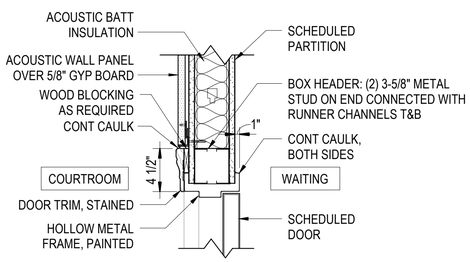

C1 HM FRAME HEAD DETAIL
SCALE: 1 1/2" = 1'-0"

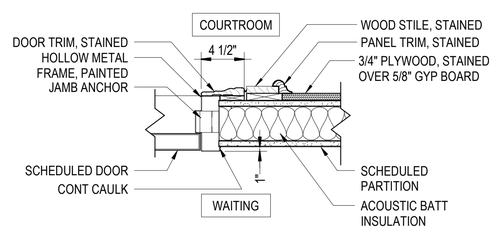

C2 HM FRAME JAMB DETAIL
SCALE: 1 1/2" = 1'-0"

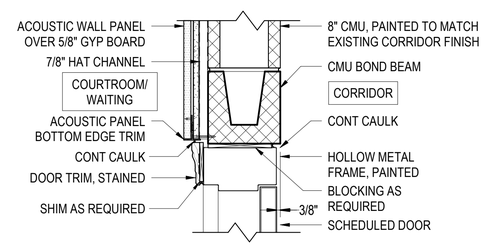

C3 HM FRAME HEAD DETAIL
SCALE: 1 1/2" = 1'-0"

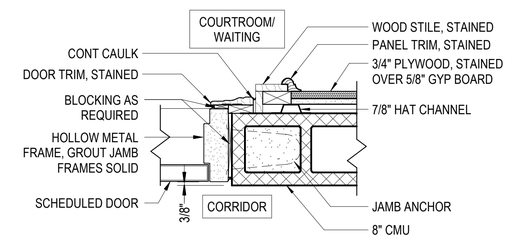

C4 HM FRAME JAMB DETAIL
SCALE: 1 1/2" = 1'-0"

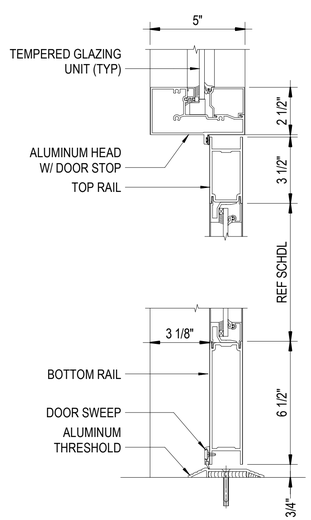

D1 STOREFRONT HEAD/SILL DETAIL
SCALE: 3" = 1'-0"

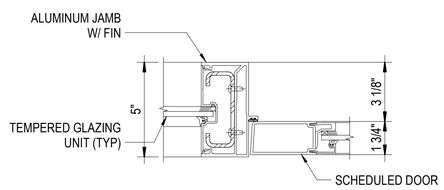

D2a STOREFRONT JAMB DETAIL
SCALE: 3" = 1'-0"

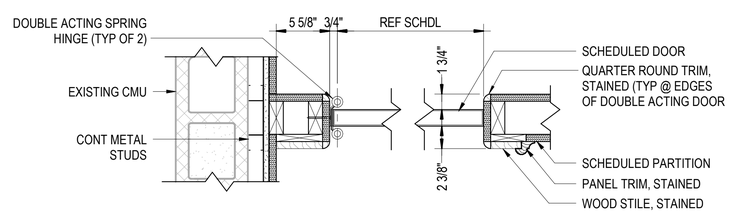

D2b DOUBLE ACTING DOOR DETAIL
SCALE: 1 1/2" = 1'-0"

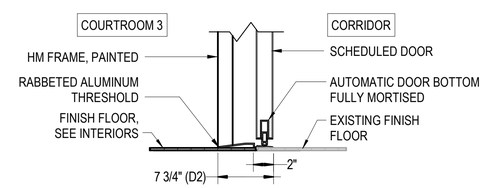

D3a HM FRAME THRESHOLD DETAIL
SCALE: 1 1/2" = 1'-0"

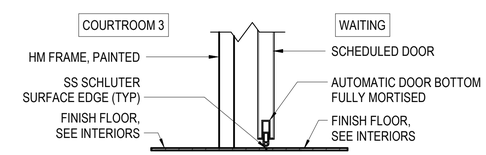

D3b HM FRAME THRESHOLD DETAIL
SCALE: 1 1/2" = 1'-0"

0 6" 1' - 0" 2' - 0"
SCALE: 1 1/2" = 1' - 0"

0 3" 6" 1' - 0"
SCALE: 3" = 1' - 0"

BAKER LPA GROUP, LLP
ARCHITECTS INTERIORS ENGINEERS
Michael Baker INTERNATIONAL
11 NORTH WATER STREET
SUITE 14290 MOBILE, AL 36602

Consultant

STATE OF ALABAMA
DOUGLAS B. THOMPSON
7906
MOBILE, ALABAMA
REGISTERED ARCHITECT
04.08.26

SEAL

NO.	DATE	DESCRIPTION

REVISIONS

STRICKLAND YOUTH CENTER COURTROOM RENOVATION

2315 COSTARIDES ST
MOBILE, AL 36617

DOOR SCHEDULE, ELEVATIONS, & DETAILS

Project Number: 214010
Date: 07-08-2026
Scale: AS NOTED
Sheet # A-611

ISSUED FOR BID

© Baker 2026

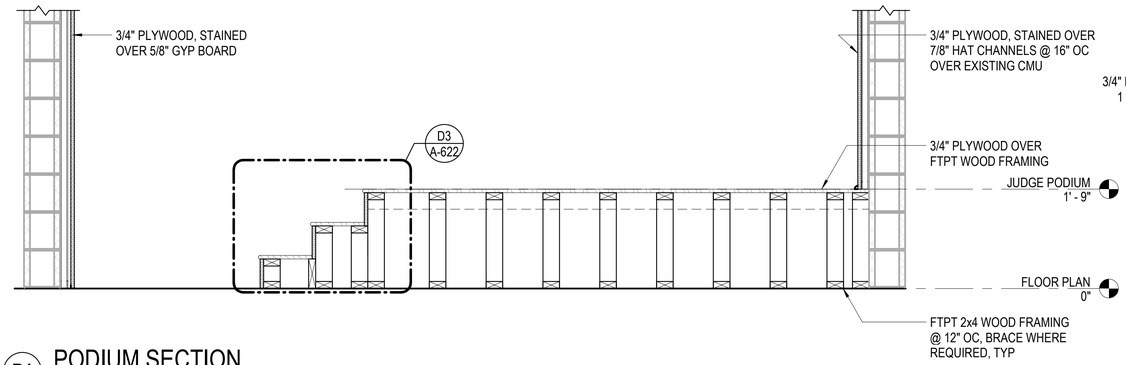

B1 PODIUM SECTION
SCALE: 3/4" = 1'-0" REF: A-110

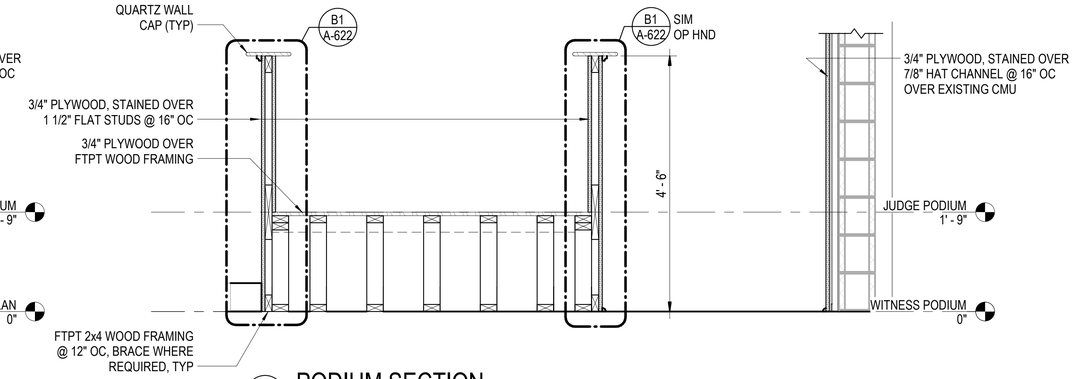

B4 PODIUM SECTION
SCALE: 3/4" = 1'-0" REF: A-110

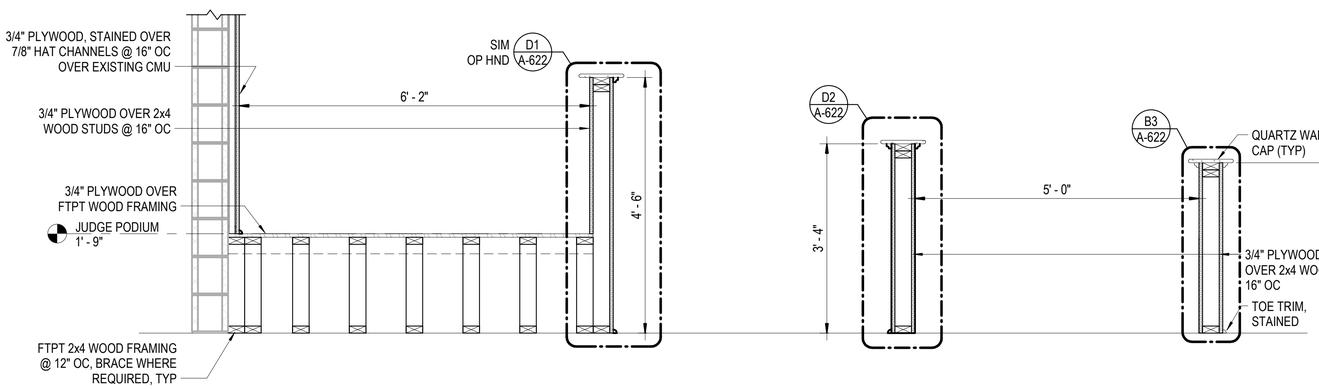

C1 PODIUM SECTION
SCALE: 3/4" = 1'-0" REF: A-110

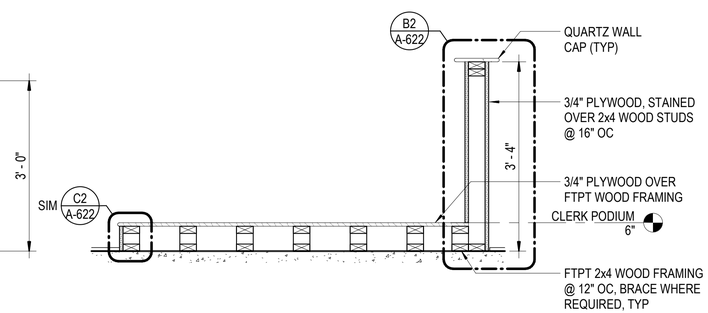

C4 PODIUM SECTION
SCALE: 3/4" = 1'-0" REF: A-110

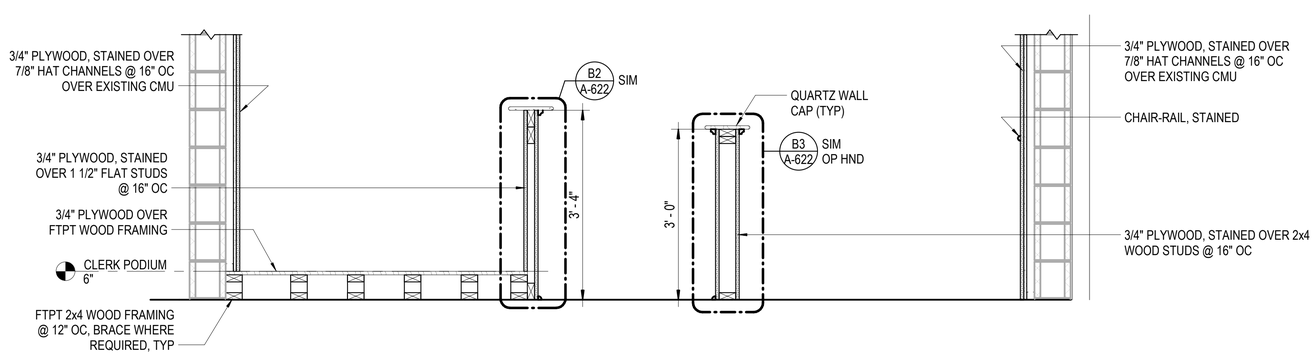

D1 PODIUM SECTION
SCALE: 3/4" = 1'-0" REF: A-110

0 1' - 0" 2' - 0" 4' - 0"
SCALE: 3/4" = 1' - 0"

BAKER LPA GROUP, LLP
A CONTINUALLY INVITED ENTITY OF MICHAEL BAKER INTERNATIONAL AND AFFILIATES
Michael Baker INTERNATIONAL
11 NORTH WATER STREET
SUITE 14290 MOBILE, AL 36602

Consultant

STATE OF ALABAMA
DOUGLAS B. THOMPSON
7906
MOBILE, ALABAMA
REGISTERED ARCHITECT
04.08.26

SEAL

NO.	DATE	DESCRIPTION

REVISIONS

STRICKLAND YOUTH CENTER COURTROOM RENOVATION
2315 COSTARIDES ST
MOBILE, AL 36617

DETAIL SECTIONS

Project Number: **214010**
Date: 07-08-2026
Scale: **AS NOTED**
Sheet # A-620

ISSUED FOR BID

© Baker 2026

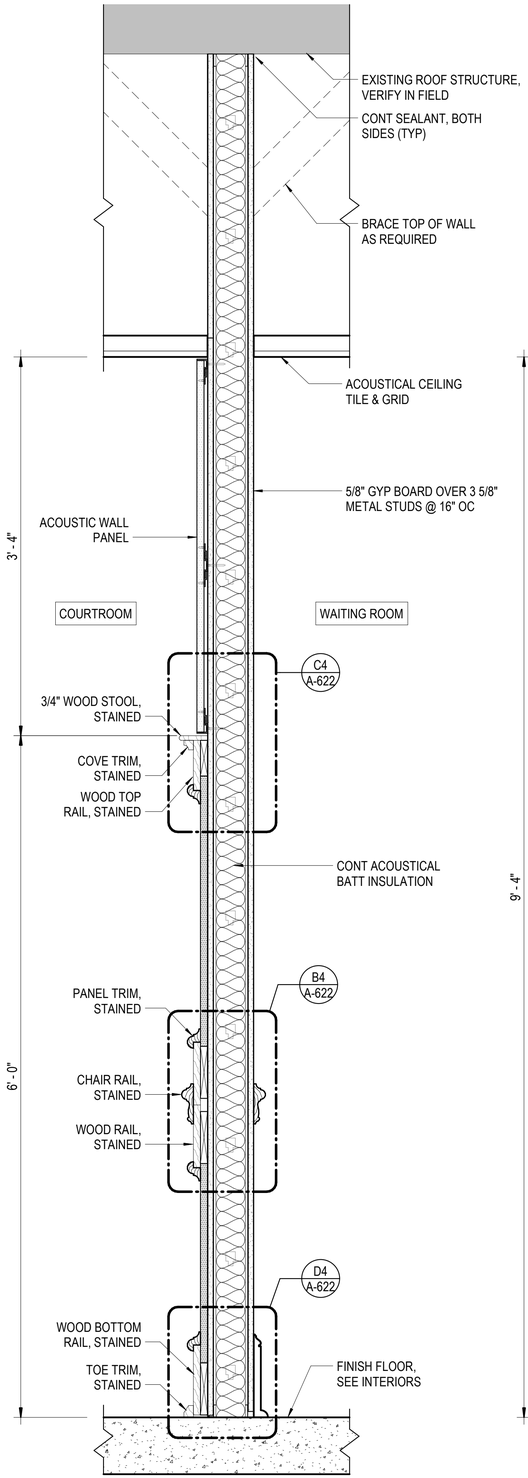

D1 WALL SECTION
SCALE: 1 1/2" = 1'-0" REF: A-110

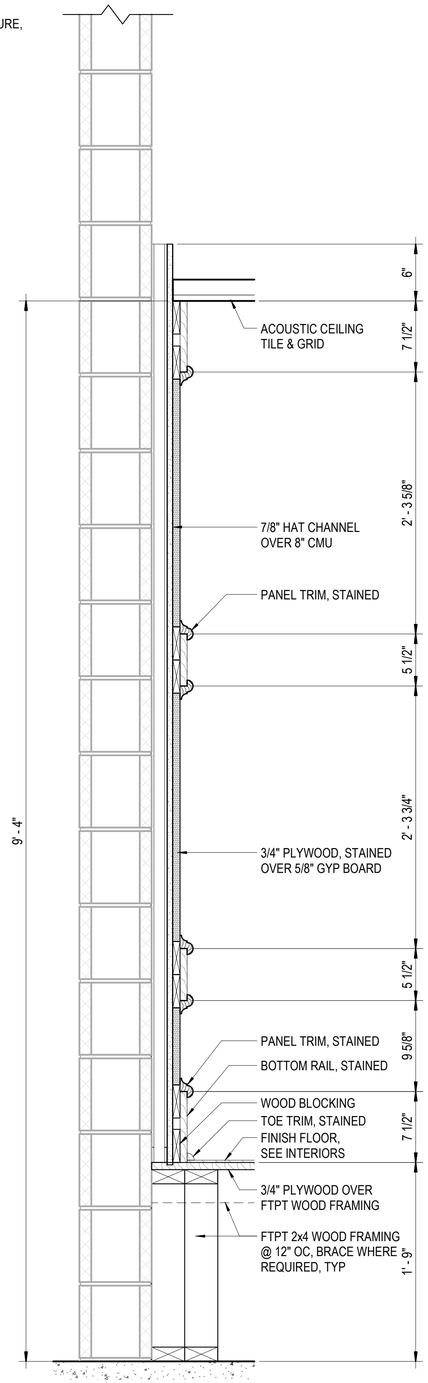

D2 WALL SECTION
SCALE: 1 1/2" = 1'-0" REF: A-110

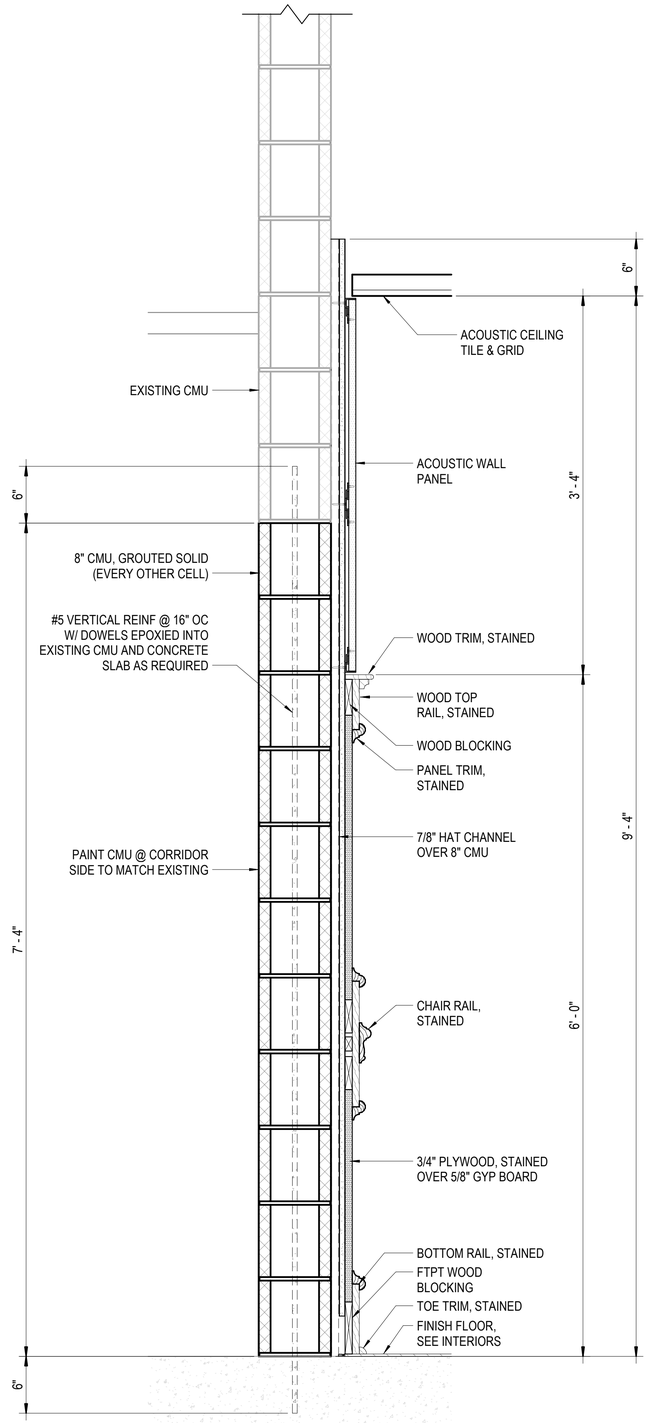

D3 CMU INFILL SECTION
SCALE: 1 1/2" = 1'-0" REF: A-110

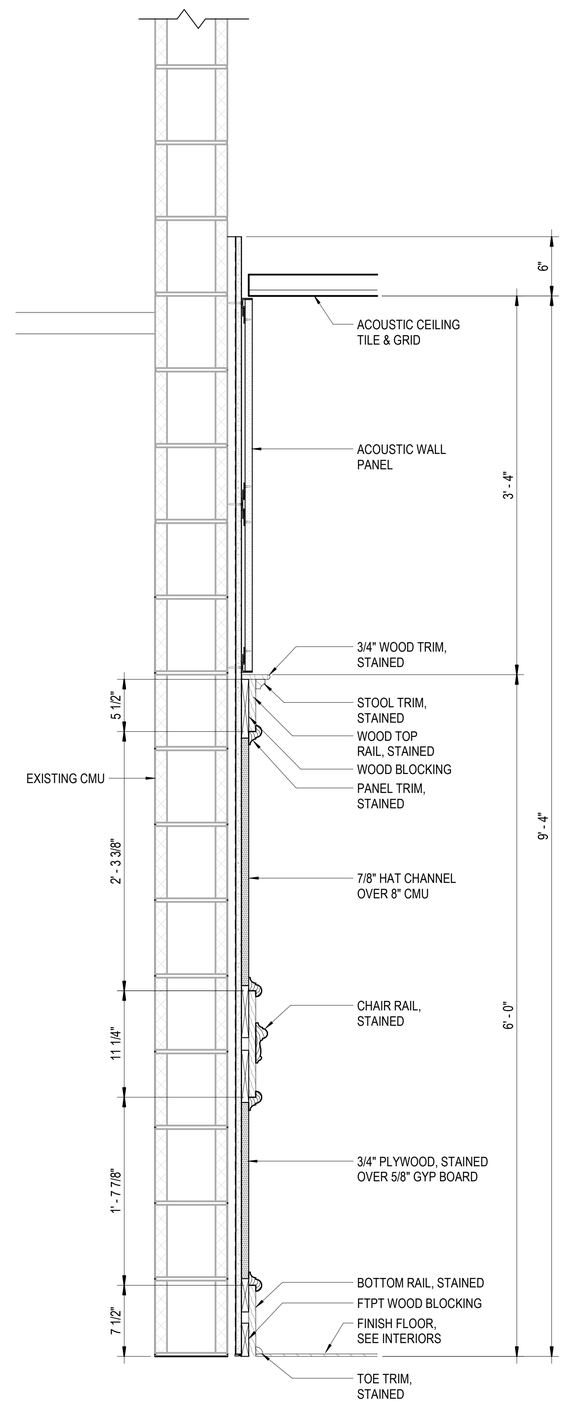

D4 WALL SECTION
SCALE: 1 1/2" = 1'-0" REF: A-110

0 6" 1' - 0" 2' - 0"
SCALE: 1 1/2" = 1' - 0"

BAKER LPA GROUP, LLP
A CONFORMED PARTNERSHIP WITH THE MICHAEL BAKER INTERNATIONAL AND BAKER LLP
Michael Baker
INTERNATIONAL
11 NORTH WATER STREET
SUITE 14290 MOBILE, AL 36602

Consultant

STATE OF ALABAMA
DOUGLAS B. THOMPSON
7901
MOBILE, ALABAMA
REGISTERED ARCHITECT
04.08.26

SEAL

NO.	DATE	DESCRIPTION

REVISIONS

STRICKLAND YOUTH CENTER COURTROOM RENOVATION

2315 COSTARIDES ST
MOBILE, AL 36617

SECTIONS & DETAILS

Project Number: **214010**

Date: 07-08-2026

Scale: **AS NOTED**

Sheet # A-621

ISSUED FOR BID

© Baker 2026

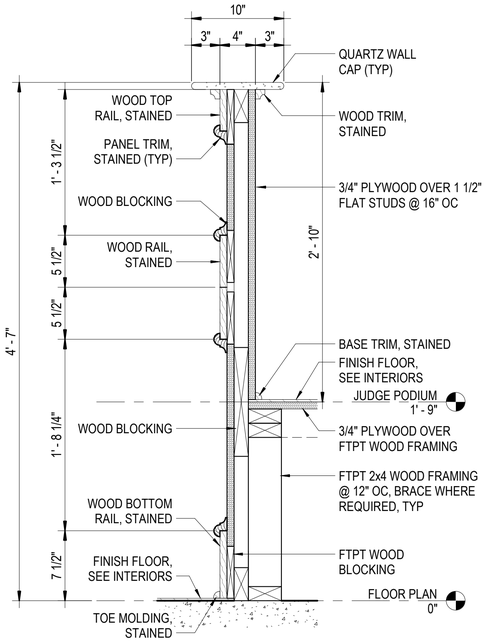

B1 PANEL SECTION DETAIL
SCALE: 1 1/2" = 1'-0" REF: A-501

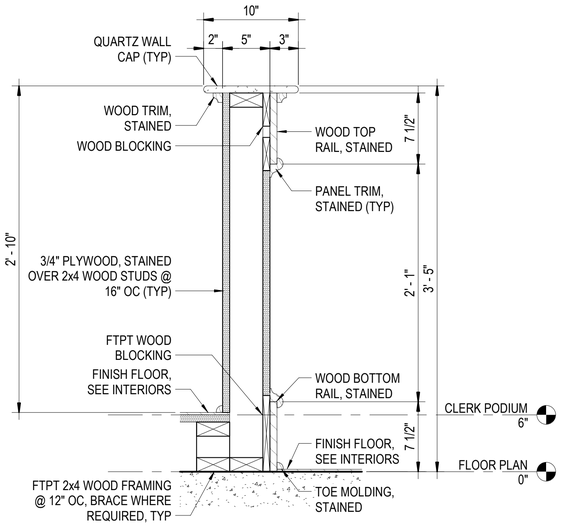

B2 PANEL SECTION DETAIL
SCALE: 1 1/2" = 1'-0" REF: A-620

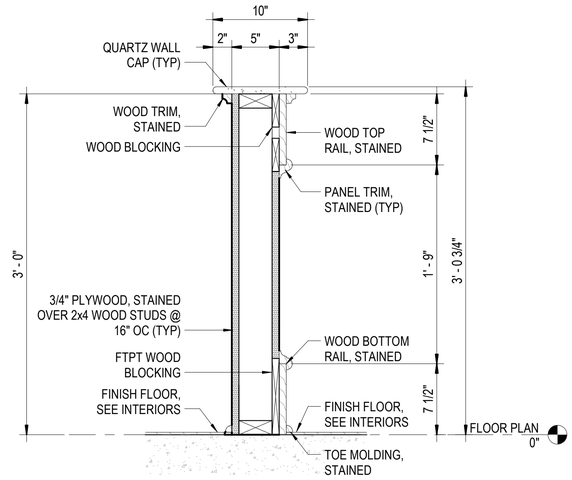

B3 PANEL SECTION DETAIL
SCALE: 1 1/2" = 1'-0"

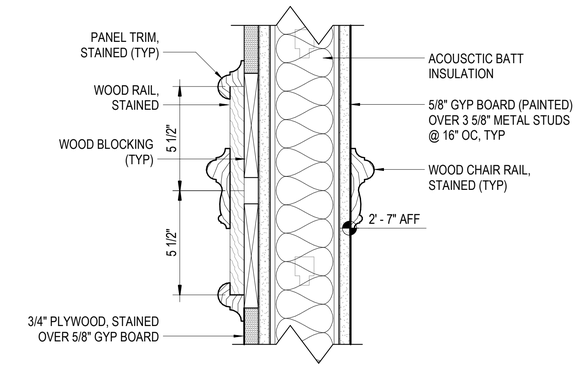

B4 WALL PANEL DETAIL
SCALE: 3" = 1'-0" REF: A-621

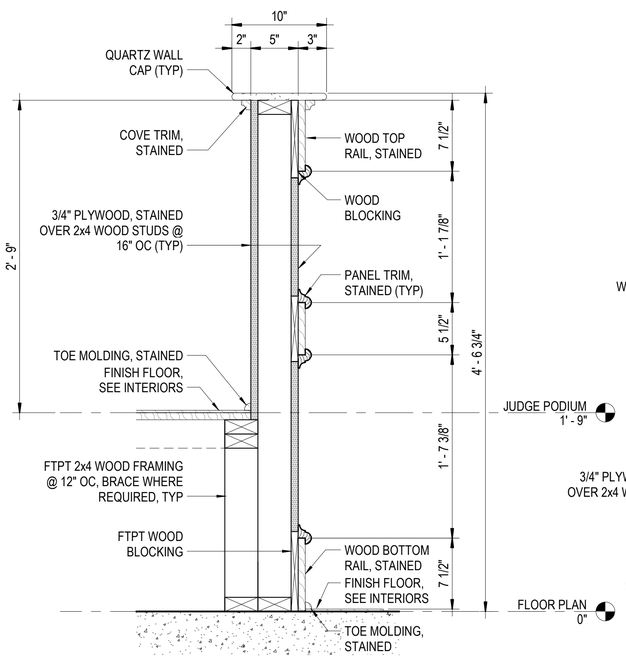

D1 PANEL SECTION DETAIL
SCALE: 1 1/2" = 1'-0" REF: A-110

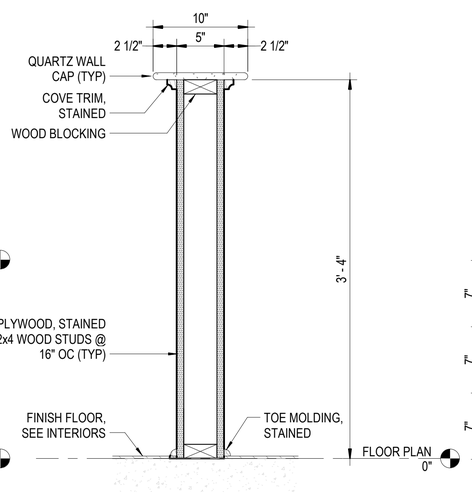

D2 PANEL SECTION DETAIL
SCALE: 1 1/2" = 1'-0" REF: A-110

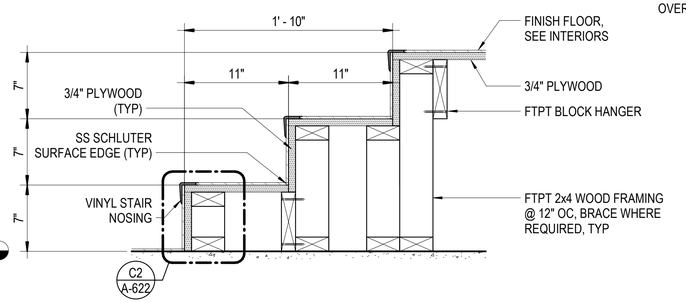

D3 STAIR SECTION DETAIL
SCALE: 1 1/2" = 1'-0" REF: A-501

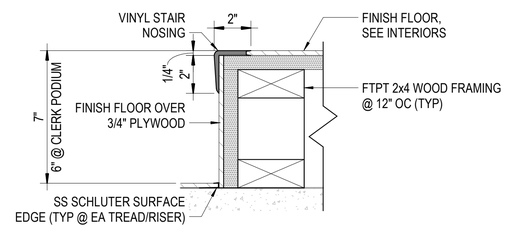

C2 ENLARGED DETAIL - STAIR NOSING
SCALE: 3" = 1'-0" REF: A-620

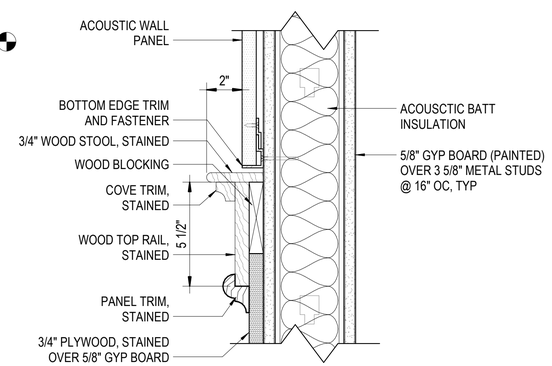

C4 WALL PANEL TOP DETAIL
SCALE: 3" = 1'-0" REF: A-621

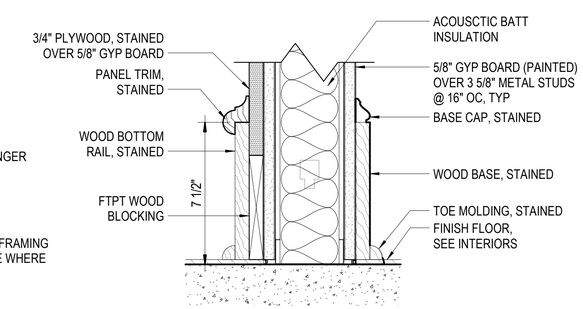

D4 WALL PANEL BASE DETAIL
SCALE: 3" = 1'-0" REF: A-621

0 6" 1' - 0" 2' - 0"
SCALE: 1 1/2" = 1' - 0"

0 3" 6" 1' - 0"
SCALE: 3" = 1' - 0"

BAKER LPA GROUP, LLP
A CONTINUED INTEGRATED ENTITY OF MICHAEL BAKER INTERNATIONAL AND AFFILIATES
Michael Baker
INTERNATIONAL
11 NORTH WATER STREET
SUITE 14290 MOBILE, AL 36602

Consultant

STATE OF ALABAMA
DOUGLAS B. THOMPSON
7906
MOBILE, ALABAMA
REGISTERED ARCHITECT
04.08.26

SEAL

NO.	DATE	DESCRIPTION

REVISIONS

STRICKLAND YOUTH CENTER COURTROOM RENOVATION
2315 COSTARIDES ST
MOBILE, AL 36617

SECTIONS & DETAILS

Project Number: 214010
Date: 07-08-2026
Scale: AS NOTED
Sheet # A-622

ISSUED FOR BID

© Baker 2026

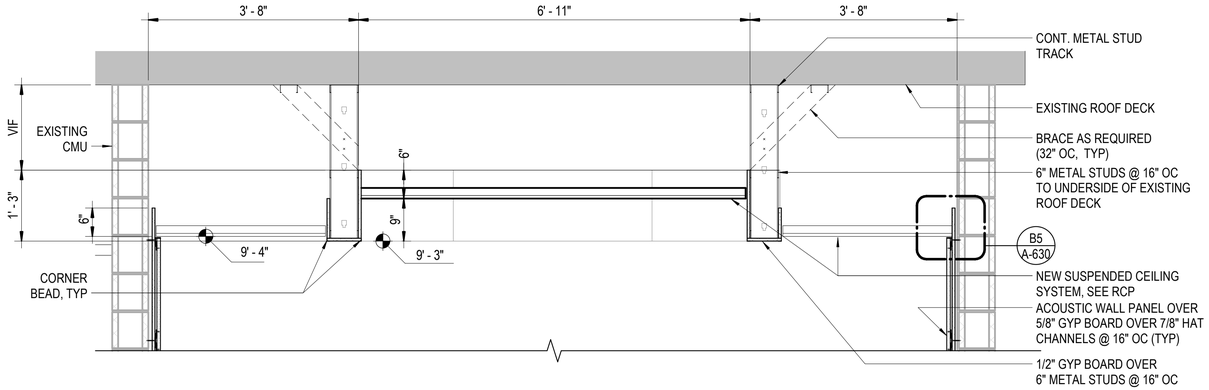

B1 SECTION - CEILING/SOFFIT
SCALE: 3/4" = 1'-0" REF: A-110

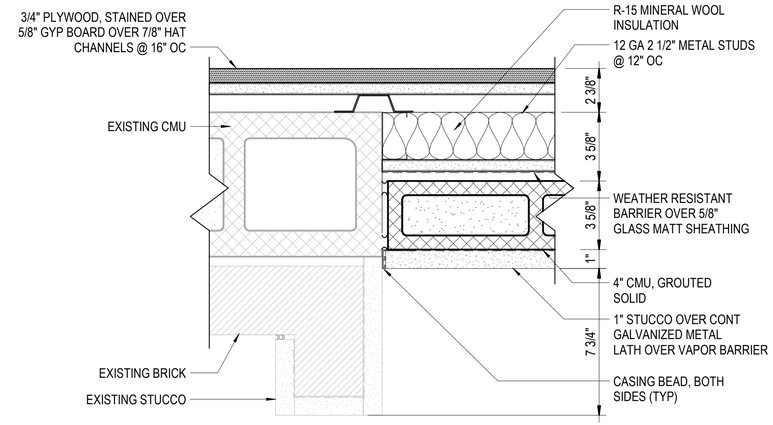

B4 WINDOW INFILL - JAMB DETAIL
SCALE: 3" = 1'-0" REF: A-110

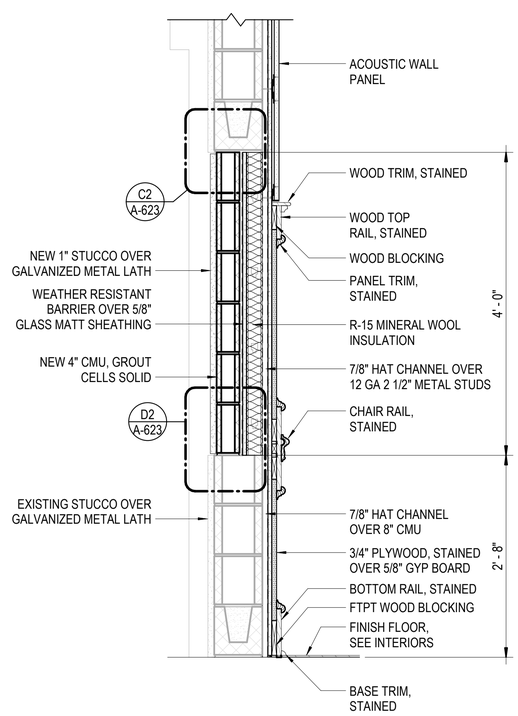

D1 WINDOW INFILL SECTION
SCALE: 1" = 1'-0" REF: A-110

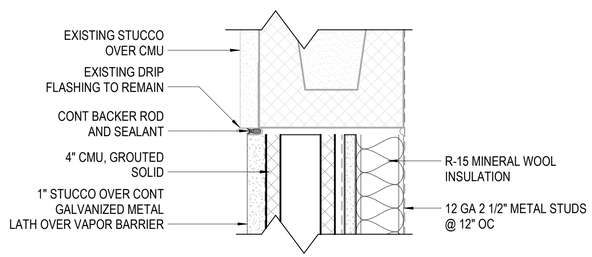

C2 WINDOW INFILL - HEAD DETAIL
SCALE: 3" = 1'-0" REF: A-623

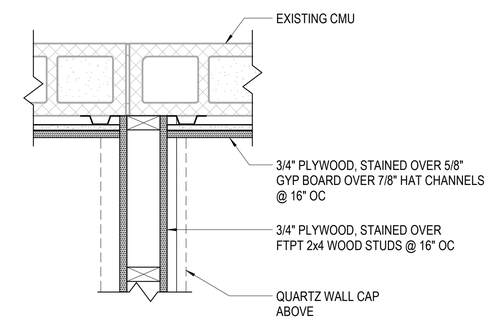

C4 ENLARGED PLAN DETAIL
SCALE: 1 1/2" = 1'-0" REF: A-110

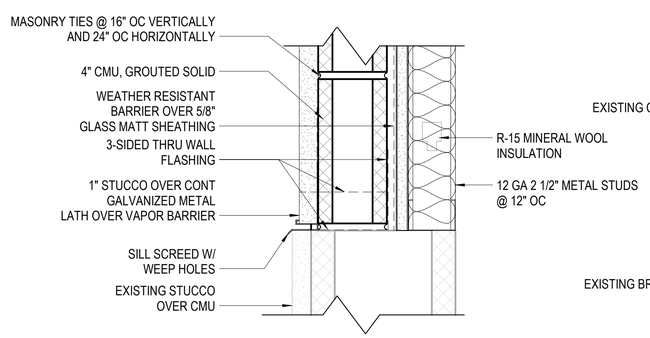

D2 WINDOW INFILL - SILL DETAIL
SCALE: 3" = 1'-0" REF: A-623

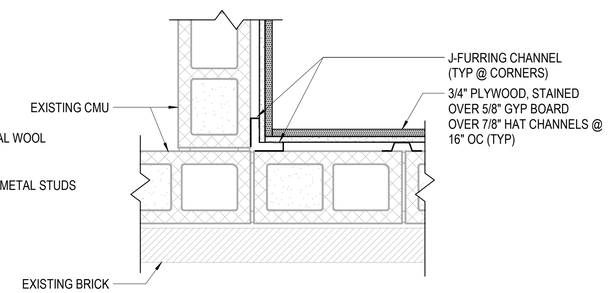

D3 ENLARGED PLAN DETAIL
SCALE: 1 1/2" = 1'-0" REF: A-110

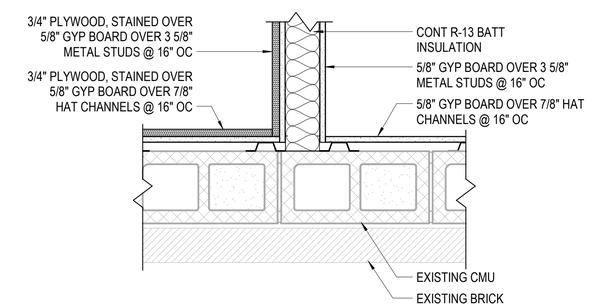

D4 ENLARGED PLAN DETAIL
SCALE: 1 1/2" = 1'-0" REF: A-110

0 6" 1' - 0" 2' - 0"
SCALE: 1" = 1' - 0"

0 6" 1' - 0" 2' - 0"
SCALE: 1 1/2" = 1' - 0"

0 3" 6" 1' - 0"
SCALE: 3" = 1' - 0"

BAKER LPA GROUP, LLP
A CONTINUED INTEGRATED ENTITY OF MICHAEL BAKER INTERNATIONAL AND LPA INC.
Michael Baker INTERNATIONAL
11 NORTH WATER STREET
SUITE 14290 MOBILE, AL 36602

Consultant

STATE OF ALABAMA
DOUGLAS B. THOMPSON
7907
MOBILE, ALABAMA
REGISTERED ARCHITECT
04.08.26

SEAL

NO.	DATE	DESCRIPTION

REVISIONS

STRICKLAND YOUTH CENTER COURTROOM RENOVATION
2315 COSTARIDES ST
MOBILE, AL 36617

SECTION & DETAILS

Project Number: 214010
Date: 07-08-2026
Scale: AS NOTED
Sheet # A-623

ISSUED FOR BID

© Baker 2026

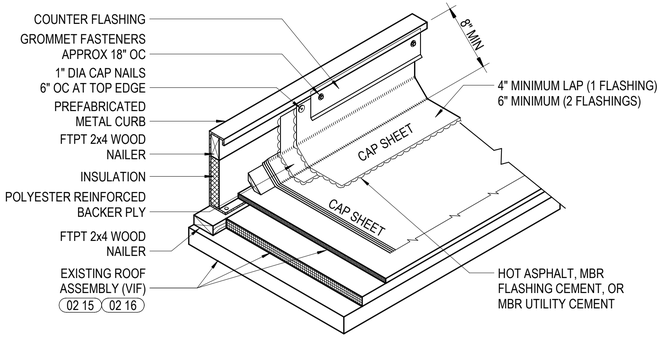

NOTES:

1. HEIGHT OF CURB TO BE ADJUSTED WITH NAILERS. IT IS PREFERRED TO RAISE ROOF HATCH WITH NAILERS TO EXTEND FLASHING HEIGHT.
2. THE VERTICAL WOOD CURB SHOULD BE FASTENED TO THE DECK ONLY.
3. CURB INSULATION MUST BE MECHANICALLY ATTACHED OR ADHERED SOLIDLY TO METAL CURB.
4. CURB MUST BE SET SO AS TO PROVIDE 8" MIN FLASHING HEIGHT.
5. METAL COUNTERFLASHING IS REQUIRED FOR ALL INSTALLATIONS.
6. ANY CARPENTRY, METAL WORK, OR MASONRY CONSTRUCTION SHOULD BE DESIGNED AND CONSTRUCTED IN ACCORDANCE WITH LOCAL CODE REQUIREMENTS AND/OR PROJECT SPECIFICATIONS. THESE COMPONENTS SHOULD BE REVIEWED AND APPROVED BY A LICENSED DESIGN PROFESSIONAL.
7. VERTICAL JOINTS ARE TO BE OVERLAPPED 4" MINIMUM FOR ALL APPLICATIONS. 3 COURSING WITH MBR UTILITY CEMENT AND FABRIC OR MBR FLASHING CEMENT IS RECOMMENDED ON ALL VERTICAL FLASHING LAPS AND INSIDE/OUTSIDE CORNERS EXTENDING PAST LEADING EDGE OF CANT STRIP.

B1 ROOF CURB FLASHING DETAIL
SCALE: 1" = 1'-0"

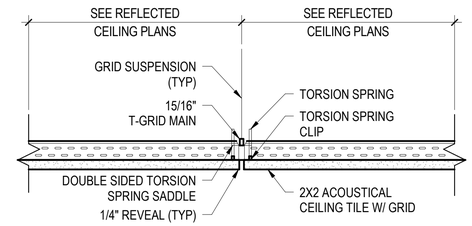

SUSPENSION SPACING AND ANCHORING: HANG PER MANUFACTURER'S LOADING REQUIREMENTS AND NOT MORE THAN 12" FROM WALL PERIMETERS. MOUNTING ORDER OF PREFERENCE SHALL BE FIRST TO STRUCTURAL JOISTS; THEN STRUCTURAL BRACING; THEN TO THE SIDE OF FLUTES OF DECKING. RODS OR WIRE SHALL NOT SLOPE FROM VERTICAL MORE THAN 1 ON 6.

B3 CEILING - TYP TILE DETAIL
SCALE: 3" = 1'-0"

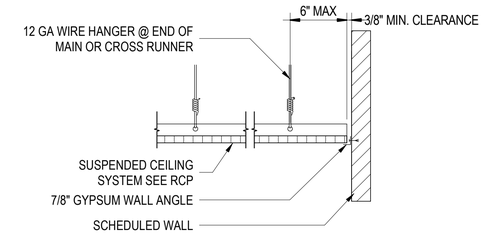

B5 CEILING - TYP WALL DETAIL
SCALE: 1 1/2" = 1'-0"

NOTES:

1. CEILING GRID INSTALLATION SHOWN APPLIES TO 2'x2' CONFIGURATION.
2. ALL FIXTURES SHALL BE SUPPORTED BY SPECIFIED HANGERS. FIXTURES WEIGHING GREATER THAN 56 LBS SHALL BE INDEPENDENTLY SUPPORTED FROM ROOF STRUCTURE.
3. GRID HANGERS SHALL BE ATTACHED IN THE FOLLOWING ORDER:
   A. PRIMARY STRUCTURE
   B. SECONDARY STRUCTURE
   C. ROOF DECK (SCREWED ATTACHED HORIZONTALLY INTO DECK FLUTES

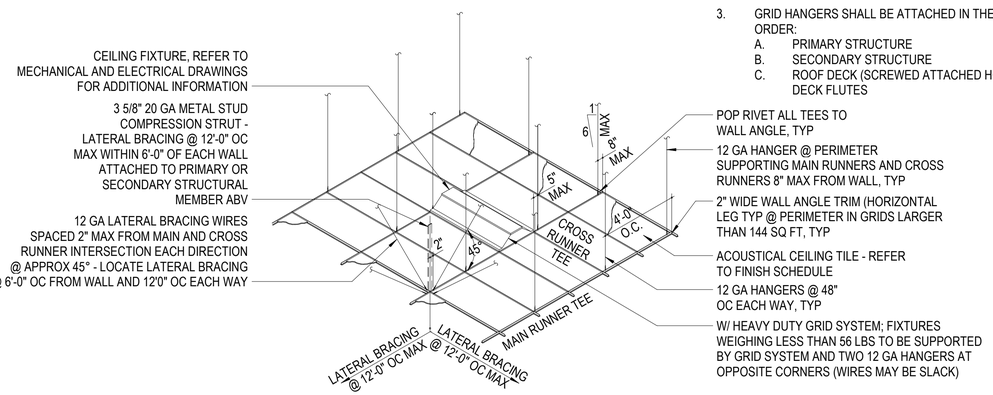

C1 TYPICAL ACT INSTALLATION DETAIL
SCALE: 1 1/2" = 1'-0"

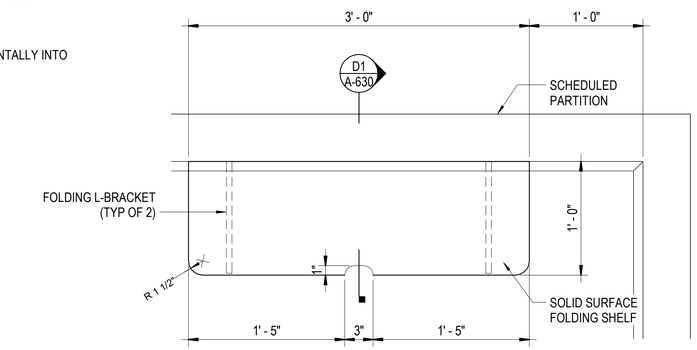

C3 ENLARGED DETAIL - FOLDING SHELF
SCALE: 1 1/2" = 1'-0" REF: A-110

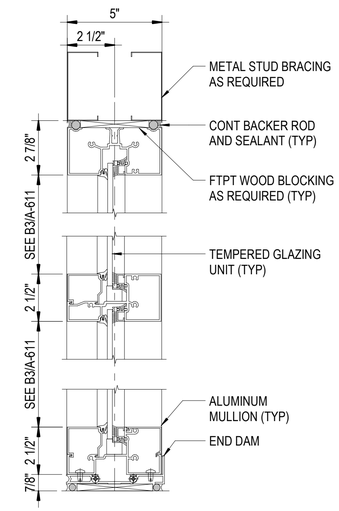

C5 STOREFRONT PARTITION DETAIL
SCALE: 3" = 1'-0" REF: A-611

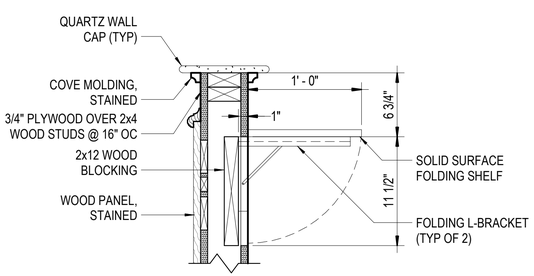

NOTE: INSTALL FOLDING SHELF TO CLOSE FLUSH WITH FINISH FACE OF PARTITION.

D1 FOLDING SHELF SECTION
SCALE: 1 1/2" = 1'-0" REF: A-630

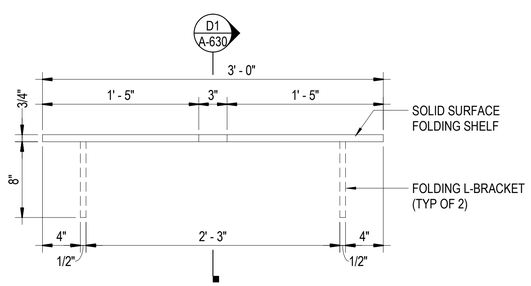

D2 FOLDING SHELF DETAIL
SCALE: 1 1/2" = 1'-0" REF: A-502

KEYNOTES

02 15 CONTRACTOR TO FIELD VERIFY EXISTING ROOFING ASSEMBLY INCLUDING STRUCTURE, DECKING, INSULATION, COVER BOARD, AND ROOFING MATERIAL.

02 16 ROOFING ASSEMBLY IS ASSUMED TO BE MODIFIED BITUMEN. CONTRACTOR SHALL NOTIFY PROJECT ARCHITECT IF FOUND TO BE A DIFFERENT ROOFING TYPE.

BAKER LPA GROUP, LLP
ARCHITECTS INTERIORS
Michael Baker
INTERNATIONAL
11 NORTH WATER STREET
SUITE 14290 MOBILE, AL 36602

Consultant

STATE OF ALABAMA
DOUGLAS B. THOMPSON
7907
MOBILE, ALABAMA
REGISTERED ARCHITECT
04.08.26

SEAL

REVISIONS

NO.	DATE	DESCRIPTION

STRICKLAND YOUTH CENTER COURTROOM RENOVATION
2315 COSTARIDES ST
MOBILE, AL 36617

ARCHITECTURAL DETAILS

0 6" 1' - 0" 2' - 0"
SCALE: 1" = 1' - 0"

0 6" 1' - 0" 2' - 0"
SCALE: 1 1/2" = 1' - 0"

0 3" 6" 1' - 0"
SCALE: 3" = 1' - 0"

Project Number: 214010
Date: 07-08-2026
Scale: AS NOTED
Sheet # A-630

ISSUED FOR BID

© Baker 2026

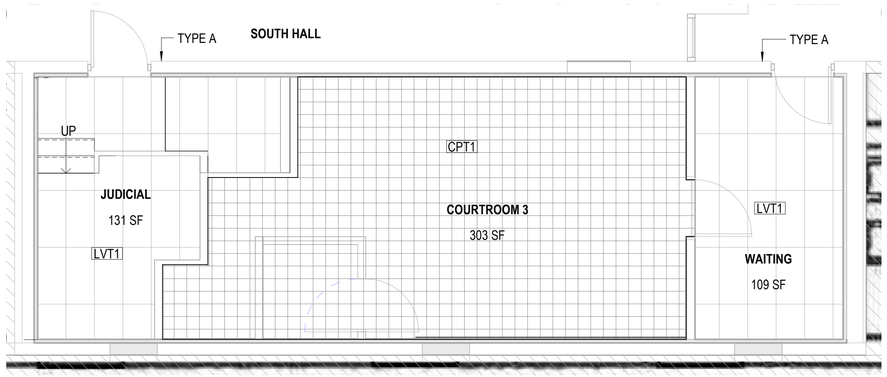

B1 INTERIORS - FINISH PLAN
SCALE: 1/4" = 1'-0"

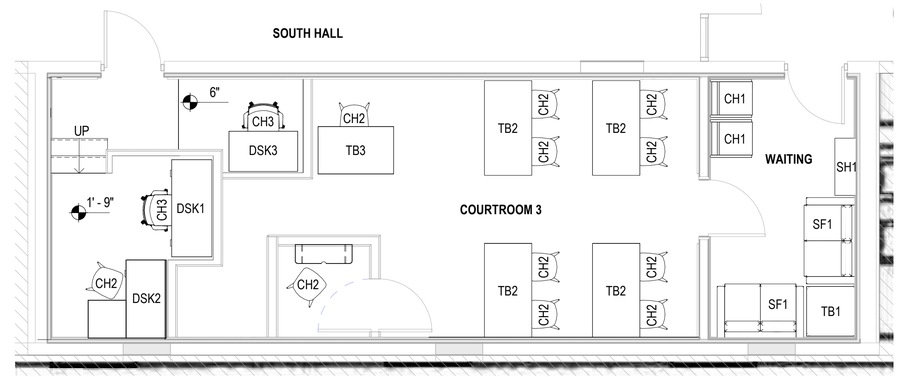

B3 INTERIORS - FURNITURE PLAN (FURNITURE NIC)
SCALE: 1/4" = 1'-0"

NOTES - INTERIOR FURNITURE

1. FF&E ITEMS ARE SHOWN FOR REFERENCE ONLY. FURNITURE NOT IN CONTRACT.
2. CONTRACTOR TO COORDINATE ELECTRICAL / DATA REQUIREMENTS AND STRUCTURAL BLOCKING FOR ITEMS PROVIDED BY USERS AS APPROVED BY THE CONTRACTING OFFICER.

LEGEND - FURNITURE

TAG	DESCRIPTION	QTY
CH1	CHAIR - WAITING ROOM	2
CH2	CHAIR - COURTROOM 3	11
CH3	CHAIR - COURTROOM 3	2
DSK1	DESK - 60"x24" - COURTROOM 3	1
DSK2	DESK - 48"x24"x24" RETURN - COURTROOM 3	1
DSK3	DESK - 42"x24" - COURTROOM 3	1
SF1	SOFA - WAITING ROOM	2
SH1	BROCHURE SHELF - WAITING ROOM	1
TB1	TABLE - WAITING ROOM	1
TB2	TABLE - 60"x30" COURTROOM 3	4
TB3	TABLE - 48"x30" COURTROOM 3	1

LEGEND

NOT IN CONTRACT

LUXURY VINYL TILE

CARPET

TYPE "X" — SIGNAGE TYPE

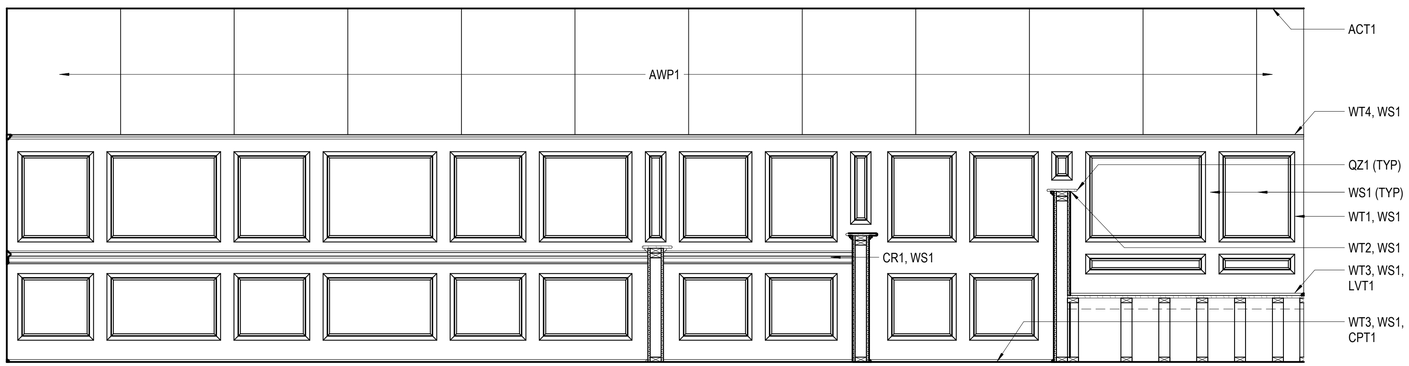

C1 INTERIOR FINISH ELEVATION
SCALE: 1/2" = 1'-0"

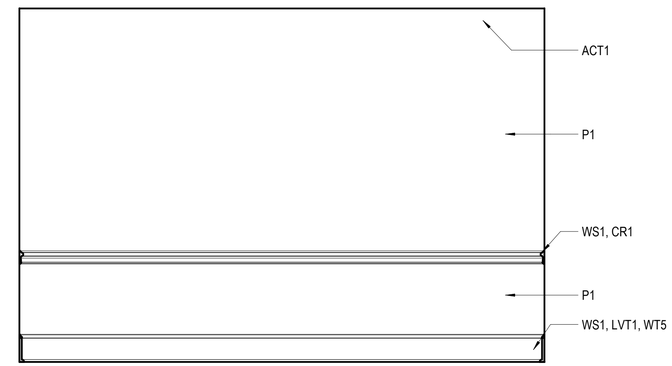

C4 TYPICAL WAITING ROOM FINISH ELEVATION
SCALE: 1/2" = 1'-0"

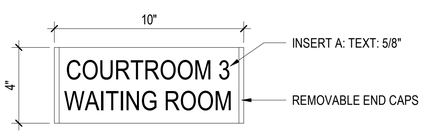

D1 PERMANENT - TYPE A
SCALE: 3" = 1'-0"

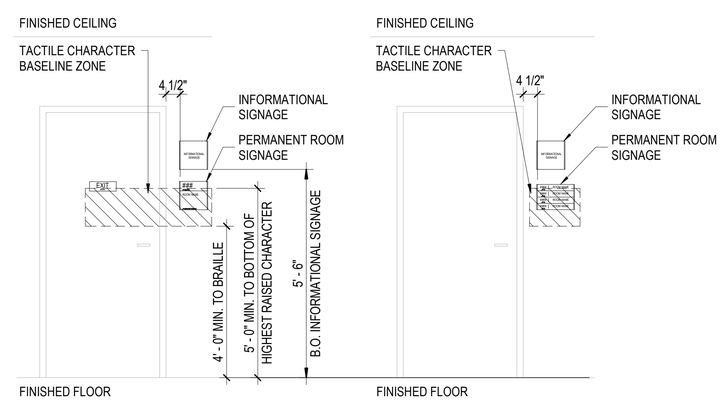

ROOM DESIGNATING & EXIT

MULTI-ROOM

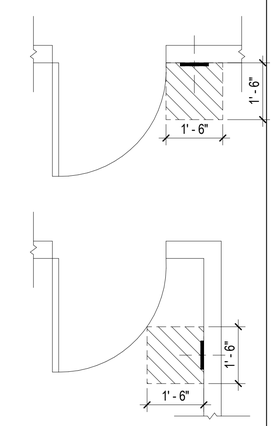

CLEAR FLOOR SPACE

MOUNTING NOTES:

1. MOUNTING OPTIONS VARY PER SIGN TYPE. MOST INTERIOR SIGNS CAN BE EASILY MOUNTED USING A COMBINATION OF CLEAR SILICONE ADHESIVE AND DOUBLE SIDED FOAM TAPE OR CONCEALED MECHANICAL FASTENERS, FOLLOW MANUFACTURER'S RECOMMENDATIONS.
2. WHERE THERE IS LESS THAN 18" CLEAR SPACE ON THE LATCH SIDE OF A SINGLE DOOR, OR ON THE RIGHT SIDE OF DOUBLE DOORS, SIGNS ARE LOCATED ON THE NEAREST ADJACENT WALL. UNLESS OTHERWISE NOTED.
3. TEXT SHOWN ON SIGN DETAILS ARE EXAMPLES.

D4 SIGNAGE DETAIL - TYPICAL INSTALLATIONS

0 2' - 0" 4' - 0" 8' - 0"
SCALE: 1/4" = 1' - 0"

0 1' - 0" 2' - 0" 4' - 0"
SCALE: 1/2" = 1' - 0"

0 3" 6" 1' - 0"
SCALE: 3" = 1' - 0"

SCHEDULE - INTERIOR MATERIAL & COLOR BASIS OF DESIGN

FINISH	DESCRIPTION	MANUFACTURER	STYLE	COLOR	COMMENTS
ACT1	ACOUSTICAL CEILING TILE	ARMSTRONG	ULTIMA BEVELED TEGULAR	WHITE	WAITING ROOM AND COURTROOM
AWP1	ACOUSTICAL WALL PANEL	-	BEVELED	COLOR TO MATCH P1	COURTROOM
CPT1	CARPET TILE	BROADLOOM CARPET	BENTLY SERVE IT UP	JULIENNE	COURTROOM PUBLIC AREA
CR1	CHAIR RAIL	-	-	STAIN TO MATCH WD1	MILLWORK SUBCONTRACTOR TO PROVIDE PROFILE SAMPLES
LVT1	LUXURY VINYL TILE	BENTLY	18"x36" COLONNADE	CORINTHIAN	WAITING ROOM AND JUDICIAL AREA
P1	PAINT	SHERWIN WILLIAMS	FLAT FINISH	ALABASTER	WAITING ROOM AND COURTROOM
QZ1	QUARTZ WALL CAP	WILSONART	CALCATTA	AQUILEA	COURTROOM
SN1	STAIR NOSING	JOHNSONITE	DTN	BEIGE	JUDICIAL AREA
VU1	VINYL UPHOLSTERY	CARNEGIE FABRICS	SAVILE 6458	#41	WAITING ROOM
WS1	WOOD STAIN	WILSONART	MAPLE	PB NUTMEG	WAITING ROOM AND COURTROOM
WT1	WALL TRIM	-	PANEL TRIM	STAIN TO MATCH WD1	MILLWORK SUBCONTRACTOR TO PROVIDE PROFILE SAMPLES
WT2	WALL TRIM	-	COVE TRIM	STAIN TO MATCH WD1	MILLWORK SUBCONTRACTOR TO PROVIDE PROFILE SAMPLES
WT3	WALL TRIM	-	WALL BASE TRIM	STAIN TO MATCH WD1	MILLWORK SUBCONTRACTOR TO PROVIDE PROFILE SAMPLES
WT4	WALL TRIM	-	WALL TOP TRIM	STAIN TO MATCH WD1	MILLWORK SUBCONTRACTOR TO PROVIDE PROFILE SAMPLES
WT5	WALL TRIM	-	WALL BASE TRIM	STAIN TO MATCH WD1	MILLWORK SUBCONTRACTOR TO PROVIDE PROFILE SAMPLES

BAKER LPA GROUP, LLP
A COMPANY WITH DEEP ROOTS OF MICHAEL BAKER INTERNATIONAL AND AFFILIATES
Michael Baker
INTERNATIONAL
11 NORTH WATER STREET
SUITE 14290 MOBILE, AL 36602

Consultant

STATE OF ALABAMA
DOUGLAS B. THOMPSON
7906
MOBILE, ALABAMA
REGISTERED ARCHITECT
04.08.26

SEAL

NO.	DATE	DESCRIPTION

REVISIONS

STRICKLAND YOUTH CENTER COURTROOM RENOVATION
2315 COSTARIDES ST
MOBILE, AL 36617

INTERIOR PLANS & DETAILS

Project Number: 214010
Date: 07-08-2026
Scale: AS NOTED
Sheet # IF110

ISSUED FOR BID

© Baker 2026

COMcheck Software Version COMcheckWeb

Mechanical Compliance Certificate

Project Information

Energy Code:	2015 IECC
Project Title:	Strickland Youth Center Courtroom Renovations
Location:	Mobile, Alabama
Climate Zone:	2a
Project Type:	Alteration

Construction Site: Owner/Agent: Designer/Contractor:

Mechanical Systems List

Quantity System Type & Description

1 HVAC System (Single Zone):
Single Package Heat Pump
Heating Mode: Capacity = 23 kBtu/h,
Proposed Efficiency = 8.00 HSPF, Required Efficiency = 8.00 HSPF
Cooling Mode: Capacity = 21 kBtu/h,
Proposed Efficiency = 15.20 SEER, Required Efficiency = 14.00 SEER
Proposed Part Load Efficiency = 0.00 , Required Part Load Efficiency = 0.00

Mechanical Compliance Statement

Compliance Statement: The proposed mechanical alteration project represented in this document is consistent with the building plans, specifications, and other calculations submitted with this permit application. The proposed mechanical systems have been designed to meet the 2015 IECC requirements in COMcheck Version COMcheckWeb and to comply with any applicable mandatory requirements listed in the Inspection Checklist.

Roger J. Smith, PE
Name - Title Signature Date

ALABAMA LICENSED No. 24744 PROFESSIONAL ENGINEER ROGER J. SMITH
7/8/2026

Project Title: Strickland Youth Center Courtroom Renovations Report date: 06/03/26
Data filename: Page 1

Smith Mechanical
Consulting & Design
ALABAMA CERTIFICATE OF AUTHORIZATION: CA-3717 E
61 Saint Joseph Street
SUITE 1100
MOBILE, AL 36602
(251) 402-1364
ROGER J. SMITH, PE 24744
roger@smitheng.us
Smith Job No: 26-017

BAKER LPA GROUP, LLP
Michael Baker INTERNATIONAL
11 NORTH WATER STREET
SUITE 14290 MOBILE, AL 36602

HVAC GENERAL NOTES:

1. INSTALL ALL WORK IN COMPLIANCE WITH THE LOCAL AUTHORITY HAVING JURISDICTION, THE 2021 INTERNATIONAL MECHANICAL CODE, AND THE 2015 INTERNATIONAL ENERGY CONSERVATION CODE.
2. COORDINATE ALL ELECTRICAL REQUIREMENTS WITH THE ELECTRICAL CONTRACTOR PRIOR TO BEGINNING ANY WORK.
3. INSTALL OUTDOOR UNITS ON 4" THICK CONCRETE PADS EXTENDING 6" IN ALL DIRECTIONS BEYOND FOOTPRINT OF UNIT. PLASTIC OR FIBERGLASS EQUIPMENT PADS SHALL NOT BE USED. SECURE UNITS TO CONCRETE PAD WITH A MINIMUM OF TWO "REDHEAD" TYPE ANCHORS.
4. DUCT CONSTRUCTION SHALL BE PER THE LATEST REQUIREMENTS OF NFPA 90A AND 90B, SMACNA AND ASHRAE AND SHALL MEET OR EXCEED THEIR REQUIREMENTS FOR SUPPORT AND REINFORCEMENT.
5. REFRIGERANT SUCTION LINES SHALL BE INSULATED WITH FLEXIBLE ELASTOMERIC INSULATION WITH A MINIMUM THICKNESS OF 0.5". ALL INSULATION INSTALLED AT BUILDING EXTERIOR SHALL BE PAINTED WITH TWO COATS OF WHITE UV PROTECTIVE PAINT.
6. BRANCH SUPPLY AND RETURN DUCT RUNOUTS SHALL BE GALVANIZED SNAP-LOCK WITH ALL JOINTS AND SEAMS SEALED WITH MASTIC. TRAVERSE JOINTS SHALL BE CONNECTED WITH SHEET METAL SCREWS MINIMUM 6" ON CENTER. ALL GALVANIZED DUCT SHALL BE INSULATED WITH 2" THICK, 1 POUND DENSITY WRAP INSULATION. INSULATION TO BE INSTALLED PER MANUFACTURERS RECOMMENDATIONS.
7. FLEXIBLE DUCT TO SUPPLY GRILLES SHALL NOT EXCEED 8'-0". ROUTE EXTERNALLY INSULATED RIGID SNAP LOCK DUCT TO WITHIN 8'-0" OF GRILLE.
8. EQUIPMENT PROVIDED AND INSTALLED ON THIS PROJECT SHALL MEET OR EXCEED THE MINIMUM EFFICIENCY REQUIREMENTS INDICATED IN THE SCHEDULE.
9. DUCT CONSTRUCTION SHALL MINIMUM 1-1/2' THICK, R-6, FIBROUS GLASS DUCT. ALL DUCT JOINTS AND SEAMS SHALL BE STAPLED AT 2" ON CENTER. ALL JOINTS AND SEAMS SHALL BE SEALED WITH PRESSURE SENSITIVE TAPE PER THE MANUFACTURERS RECOMMENDATIONS. THE DUCT SEAL SHALL MEET OR EXCEED PRESSURE CLASS 2".
10. DUCT CONSTRUCTION SHALL BE G-90 GALVANIZED SHEET METAL. DUCT SEALING SHALL BE CLASS "A", ALL JOINTS, SEAMS, AND PENETRATIONS SHALL BE BRUSHED WITH 2 COATS OF WATER BASED MASTIC. THE DUCT SEAL SHALL MEET OR EXCEED PRESSURE CLASS 2".
11. ALL SHEET METAL DUCT SHALL BE EXTERNALLY INSULATED WITH 2" THICK, MINIMUM R-6.0 DUCT WRAP WITH AN FSK JACKET. JOINTS AND SEAMS SHALL OVERLAP 2" AND SHALL BE STAPLED AT 6" ON CENTER. ALL INSULATION JACKET JOINTS AND SEAMS SHALL BE SEALED WITH PRESSURE SENSITIVE TAPE. INSULATION APPLIED TO DUCT DIMENSIONS GREATER THAN 24" SHALL BE SECURED ON THE BOTTOM OF THE DUCT WITH MECHANICAL FASTENERS AT 18" ON CENTER.
12. THE MECHANICAL CONTRACTOR SHALL COORDINATE WITH THE GENERAL CONTRACTOR AND OTHER TRADES ALL REQUIRED OPENINGS IN WALLS, FOUNDATIONS, FLOORS, AND ROOFS. CONTRACTOR SHALL INSTALL LOUVERS PER MANUFACTURERS RECOMMENDATIONS AND DETAILS INDICATED ON THE ARCHITECTURAL PLANS.
13. ALL OUTSIDE AIR INLETS SHALL BE LOCATED A MINIMUM OF 10 FEET FROM ANY EXHAUST AIR OUTLET OR PLUMBING VENT STACK. COORDINATE WITH THE PLUMBING DRAWINGS AND WITH THE PLUMBING AND GENERAL CONTRACTORS IN THE FIELD.
14. THE MECHANICAL CONTRACTOR SHALL VERIFY ALL MECHANICAL EQUIPMENT LOCATIONS AND BE RESPONSIBLE FOR ALL RELATED CLEARANCES IN THE FIELD. PROVIDE CLEARANCE IN FRONT OF ALL ELECTRICAL PANELS PER NATIONAL ELECTRIC CODE REQUIREMENTS. DUCT SHALL NOT ROUTE OVER ELECTRICAL PANELS.
15. OFFSET AND TRANSITION DUCT AS NECESSARY TO AVOID STRUCTURAL MEMBERS OR EQUIPMENT CONNECTION SIZES. PROVIDE FLEXIBLE DUCT CONNECTORS ON ALL DUCT CONNECTION TO MOTORIZED EQUIPMENT.
16. PROVIDE EACH HVAC SYSTEM WITH A 7 DAY PROGRAMMABLE WI-FI THERMOSTAT WITH BATTERY BACKUP AND UNOCCUPIED HOURS SET BACK CAPABILITIES.

AIR DEVICE SCHEDULE

MARK	CD CFM										NOTES
	BASIS OF DESIGN: TITUS TDC-AA										
CFM	0-95	96-175	175-240	241-280	281-380	381-470	471-650	471-535	536-740	741-925	1 2 3 4 5
GRILLE FACE SIZE	6x6	9x9	9x9	12x12	12x12	12x12	15x15	18x18	18x18	18x18	
DUCT CONNECTION	6Ø	7Ø	8Ø	9Ø	10Ø	12Ø	14Ø	12Ø	14Ø	16Ø	

MARK	RG CFM										
	BASIS OF DESIGN: TITUS 350FL										
CFM	0-110	111-220	221-350	351-525	526-730	731-970	971-1240	1241-1500	1501-1850	1851-2250	1 2 4 5
GRILLE FACE SIZE	6x6	8x8	10x10	12x12	14x14	16x16	18x18	20x20	22x22	24x24	
DUCT CONNECTION	6x6	8x8	10x10	12x12	14x14	16x16	18x18	20x20	22x22	24x24	

PROVIDE AIR DEVICE WITH THE FOLLOWING OPTIONS:

1. REFER TO ARCHITECTURAL PLANS FOR CEILING TYPES. PROVIDE AIR DEVICE WITH 24"x24" LAY-IN PANEL FOR GRILLES IN LAY-IN CEILING.
2. PROVIDE AIR DEVICE WITH INTEGRAL BALANCING DAMPER.
3. PROVIDE AS 4-WAY THROW UNLESS INDICATED OTHERWISE.
4. AIR DEVICE SHALL BE PAINTED OFF WHITE.
5. TRANSITION DUCT FROM SIZE INDICATED TO AIR DEVICE CONNECTION SIZE.

2021 IMC OUTDOOR AIR VENTILATION REQUIREMENT CALCULATIONS

APPLICATION	OCCUPANCY (PERSONS AND/OR AREA)	X	CFM/PERSON REQUIREMENT	X	CFM/SF REQUIREMENT	=	TOTAL OUTSIDE AIR REQUIRED
COURTROOM	17 PEOPLE 480 SF	X	5.0	X	0.06	=	114
OFFICE	6 PEOPLE 110 SF	X	5.0	X	0.06	=	37

PACKAGED HEAT PUMP UNIT SCHEDULE

MARK RTU-	AIR DATA				COOLING CAPACITY					HEATING CAPACITY	ELECTRIC REHEAT		FILTER		COMPRESSOR (RLA)	OUTDOOR FAN (FLA)	MINIUMUM COP	MINIMUM SEER	MINIMUM IEER	ELECTRICAL DATA					NOTES
	TOTAL (CFM)	OUTSIDE MAX / MIN (CFM)	EXTERNAL STATIC PRESSURE (in of H2O)	MOTOR (HP)	EDB (F)	EWB (F)	AMBIENT (F)	SENSIBLE BTUH	TOTAL BTUH	TOTAL BTUH	CONTROL STAGES	STRIP HEAT (KW)	TYPE	MIN MERV						VOLTS	Hz	PHASE	MCA (AMPS)	MOCP (AMPS)	
1	830	151/ 125	0.5	1/12	80	67	95	17,450	21,950	23,060	1	7.2	1"	8	10.3	0.56	4	15.2	15.0	208	60	3	54.8	60	1, 2, 3, 4

NOTES

1. COORDINATE ALL ELECTRICAL REQUIREMENTS WITH THE ELECTRICAL CONTRACTOR.
2. PROVIDE AIR HANDLING UNIT WITH 1" THICK INSULATION AND FACTORY MOUNTED SINGLE POINT POWER DISCONNECT.
3. PROVIDE AND INSTALL UNIT WITH RETURN DUCT MOUNTED SMOKE DETECTOR, SMOKE DETECTOR SHALL BE INTERLOCKED WITH THE BUILDING FIRE ALARM SYSTEM.
4. BASIS OF DESIGN: CARRIER 50NR-B24 SERIES. PROVIDE WITH PROGRAMMABLE THERMOSTAT.

Consultant

ALABAMA LICENSED No. 24744 PROFESSIONAL ENGINEER ROGER J. SMITH
SEAL 7/8/2026

NO.	DATE	DESCRIPTION

REVISIONS

STRICKLAND YOUTH CENTER COURTROOM RENOVATIONS
2315 COSTARIDES ST
MOBILE, AL 36617

HVAC NOTES AND SCHEDULES

Project Number: 214010
Date: 07-08-2026
Scale: AS NOTED
Sheet # M-100

ISSUED FOR BID

© Baker 2026

SHEET NOTES

1. EXISTING PACKAGED TERMINAL AIR CONDITIONERS TO BE REMOVED ENTIRELY.
2. NEW ROOFTOP UNIT TO BE INSTALLED PER SPECIFIC MANUFACTURER'S RECOMMENDATIONS. FIELD VERIFY SUITABLE LOCATION FOR ROOF PENETRATION PRIOR TO COMMENCEMENT OF WORK. PROVIDE WITH ROOF CURB. SEE PACKAGED ROOFTOP DETAIL FOR ADDITIONAL REQUIREMENTS.
3. CEILING DIFFUSER TO BE INSTALLED AND BALANCED TO INDICATED AIRFLOW. COORDINATE FINAL LOCATION WITH ARCHITECT.
4. RETURN GRILLE TO BE INSTALLED AND BALANCED TO INDICATED AIRFLOW. COORDINATE FINAL LOCATION WITH ARCHITECT.
5. COORDINATE DUCT WORK INSTALLATION WITH OTHER TRADES. ROUTE AS HIGH AS POSSIBLE TO THE UNDERSIDE OF THE STRUCTURE.
6. INSTALL THERMOSTAT AND CARBON DIOXIDE SENSOR 48" AFF.
7. APPROXIMATE LOCATION OF EXISTING SUPPLY GRILLE TO BE REMOVED. REMOVE ASSOCIATED BRANCH DUCT BACK TO A POINT IN THE CORRIDOR AND BLANK OFF WITH AN INSULATED PATCH.
8. CONTRACTOR SHALL PROTECT RETURN AIR GRILLES AND SMOKE DETECTORS DURING DEMOLITION WORK TO PREVENT DUST FROM SETTING OFF ALARM.

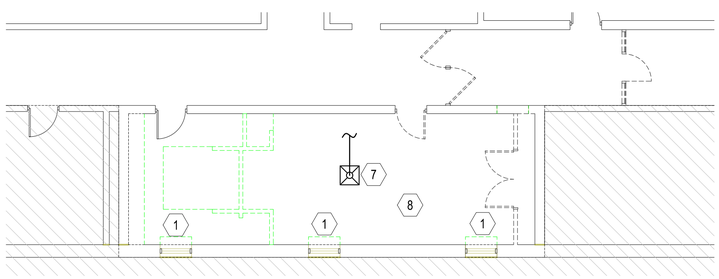

N (1) **HVAC DEMO PLAN**

8' 0' 8' 16'

SCALE: 1/8"=1'-0"

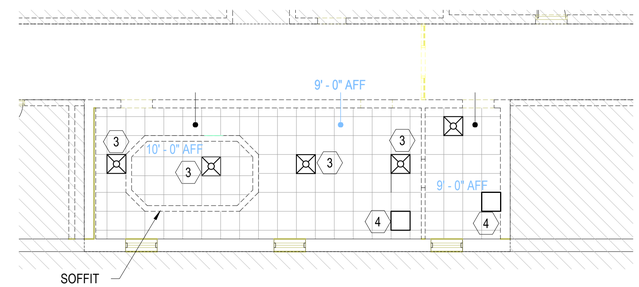

N (3) **HVAC REFLECTED CEILING PLAN**

8' 0' 8' 16'

SCALE: 1/8"=1'-0"

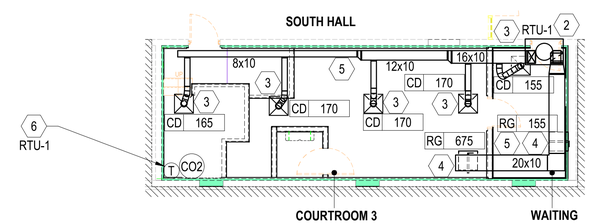

N (2) **HVAC NEW WORK PLAN**

8' 0' 8' 16'

SCALE: 1/8"=1'-0"

Smith Mechanical
Consulting & Design
ALABAMA CERTIFICATE OF AUTHORIZATION: CA-3717 E
61 Saint Joseph Street
SUITE 1100
MOBILE, AL 36602
(251) 402-1364
ROGER J. SMITH, PE 24744
roger@smitheng.us
Smith Job No: 26-017

BAKER LPA GROUP, LLP
Michael Baker INTERNATIONAL
11 NORTH WATER STREET
SUITE 14290 MOBILE, AL 36602

Consultant

ALABAMA LICENSED No. 24744 PROFESSIONAL ENGINEER ROGER J. SMITH

SEAL

7/8/2026

DATE	DESCRIPTION

REVISIONS

STRICKLAND YOUTH CENTER COURTROOM RENOVATIONS

2315 COSTARIDES ST
MOBILE, AL 36617

HVAC PLANS

Project Number: 214010

Date: 07-08-2026

Scale: AS NOTED

Sheet # M-200

ISSUED FOR BID

© Baker 2026

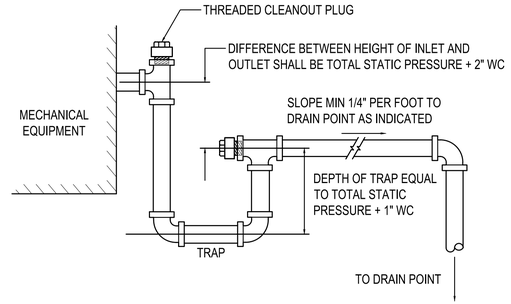

1 TYPICAL CONDENSATE TRAP DETAIL

NOT TO SCALE

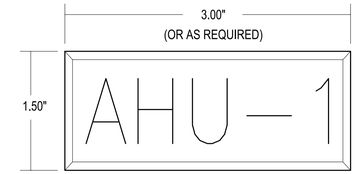

ENGRAVED PLASTIC TAG WITH 1" HIGH WHITE LETTERS ON BLACK BACKGROUND. TAG SHALL HAVE ALL EDGES BEVELED AND SMOOTH. SECURE TAG WITH PERMANENT, WATERPROOF DOUBLE SIDED TAG TAPE AT VISIBLE LOCATION ON MECHANICAL EQUIPMENT. LABEL ALL INDOOR AND OUTDOOR UNITS WITH NOTATION SHOWN ON PLANS.

2 TYPICAL ENGRAVED TAG DETAIL

NOT TO SCALE

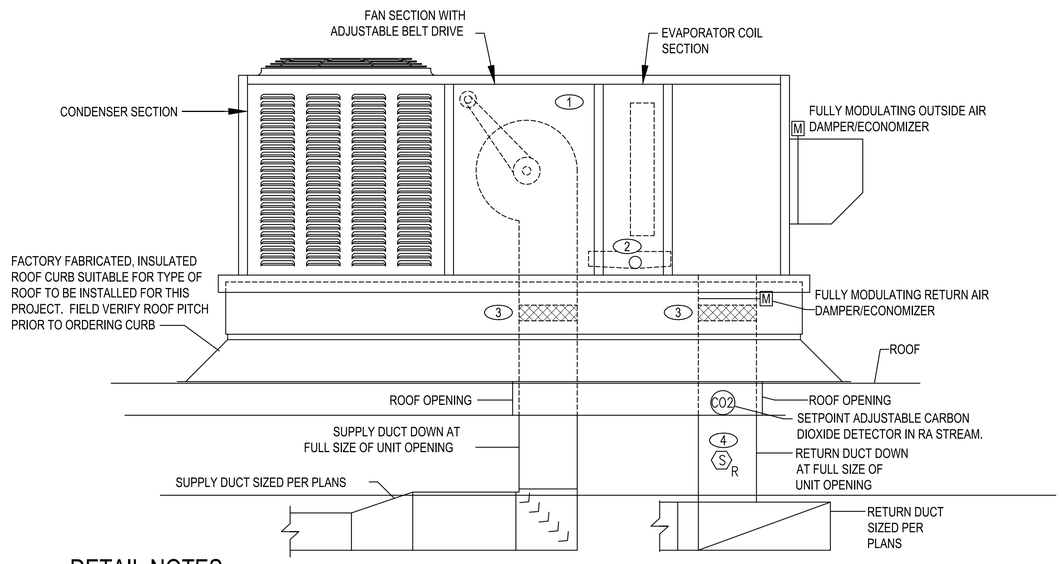

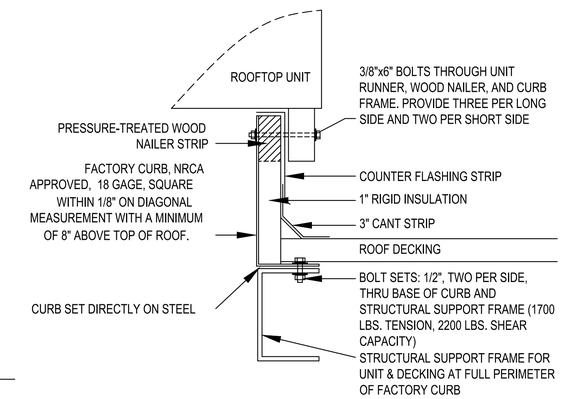

ROOF MOUNTED EQUIPMENT / CURB TIE DOWN DETAIL

NOT TO SCALE

DETAIL NOTES:

1. PROVIDE ROOF CURB.
2. MECHANICAL CONTRACTOR SHALL COORDINATE LOCATION AND SIZE OF ROOF OPENINGS REQUIRED BY ACTUAL EQUIPMENT INSTALLED WITH THE GENERAL CONTRACTOR IN THE FIELD.
3. CONNECTION OF THE ROOF CURB TO THE BUILDING STRUCTURE SHALL BE AS DETAILED BY THE STRUCTURAL ENGINEER AND/OR ARCHITECT TO RESIST WIND LOADING IN ACCORDANCE TO THE INTERNATIONAL BUILDING CODE. DESIGN AND CONSTRUCT EQUIPMENT AND CURB, INCLUDING ATTACHMENT OF UNIT TO CURB TO STRUCTURE, TO RESIST WIND LOADS AS DETERMINED BY THE 2021 INTERNATIONAL BUILDING CODE. SUBMIT ENGINEERING DATA SUBSTANTIATING COMPLIANCE WITH REQUIREMENT.

(1) PACKAGED ROOFTOP AIR CONDITIONING / HEATING UNIT. SEE EQUIPMENT SCHEDULE FOR REQUIRED PERFORMANCE AND SEE HVAC PLAN FOR LOCATION.

(2) CONDENSATE PAN, TRAP AT UNIT AND ROUTE PIPE ACROSS ROOF AND TURN DOWN ADJACENT TO JANITOR'S SINK. TURN PIPING BACK UNDER COVERED JANITOR'S SINK. TERMINATE ROOF DRAIN PIPING INDIRECTLY IN JANITOR'S SINK. CONTRACTOR SHALL INSTALL A MOISTURE SENSOR SIMILAR TO "WATERBUG" OR "AQUABLOCK" IN CONDENSATE DRAIN PAN WHICH SHALL INTERRUPT CONTROL VOLTAGE TO UNIT IF PAN IS MORE THAN 2/3 FULL. THE INTERRUPTION OF CONTROL VOLTAGE TO UNIT SHALL CAUSE THE UNIT TO SHUT DOWN.

(3) FLEXIBLE DUCT CONNECTOR, TYPICAL FOR SUPPLY AND RETURN DUCT CONNECTIONS.

(4) DUCT MOUNTED SMOKE DETECTOR, WIRE TO SHUT DOWN UNIT UPON DETECTION OF SMOKE. UNITS REQUIRE A SMOKE DETECTOR IN THE RETURN. SMOKE DETECTORS ARE PROVIDED AND INSTALLED BY MECHANICAL CONTRACTOR. COORDINATE INTERLOCK WITH THE BUILDING FIRE ALARM SYSTEM WITH THE FIRE ALARM CONTRACTOR.

3 PACKAGED ROOFTOP AIR CONDITIONER DETAIL

NOT TO SCALE

RTU / CURB TIE DOWN DETAIL NOTES

1. MECHANICAL CONTRACTOR IS RESPONSIBLE FOR PROVIDING STRUCTURAL ENGINEER APPROVED ROOFTOP EQUIPMENT TIE DOWN METHOD SEALED BY HIS STRUCTURAL ENGINEER.
2. MECHANICAL SUBCONTRACTOR SHALL FURNISH ROOF OPENING SIZES & LOCATIONS FOR STRUCTURAL SUPPORT FRAMING BY GENERAL CONTRACTOR.
3. CURB SHALL BE MANUFACTURED WITH SLOPING BASE TO MATCH ROOF PITCH AND LEVEL TOP.
4. SYSTEM SHALL BE CAPABLE OF WITHSTANDING WIND LOADING IN ACCORDANCE WITH THE 2018 INTERNATIONAL BUILDING CODE AND OTHER APPLICABLE CODES.

Smith Mechanical
Consulting & Design
ALABAMA CERTIFICATE OF AUTHORIZATION: CA-3717 E
61 Saint Joseph Street
SUITE 1100
MOBILE, AL 36602
(251) 402-1364
ROGER J. SMITH, PE 24744
roger@smitheng.us
Smith Job No: 26-017

BAKER LPA GROUP, LLP
Michael Baker INTERNATIONAL
11 NORTH WATER STREET
SUITE 14290 MOBILE, AL 36602

Consultant

ALABAMA LICENSED No. 24744 PROFESSIONAL ENGINEER ROGER J. SMITH
SEAL
7/8/2026

NO.	DATE	DESCRIPTION

REVISIONS

STRICKLAND YOUTH CENTER COURTROOM RENOVATIONS
2315 COSTARIDES ST
MOBILE, AL 36617

HVAC DETAILS

Project Number: 214010
Date: 07-08-2026
Scale: AS NOTED
Sheet # M-300

ISSUED FOR BID

© Baker 2026

Smith Mechanical
Consulting & Design
ALABAMA CERTIFICATE OF AUTHORIZATION: CA-3717 E
61 Saint Joseph Street
SUITE 1100
MOBILE, AL 36602
(251) 402-1364
ROGER J. SMITH, PE 24744
roger@smitheng.us
Smith Job No: 26-017

BAKER LPA GROUP, LLP
Michael Baker
INTERNATIONAL
11 NORTH WATER STREET
SUITE 14290 MOBILE, AL 36602

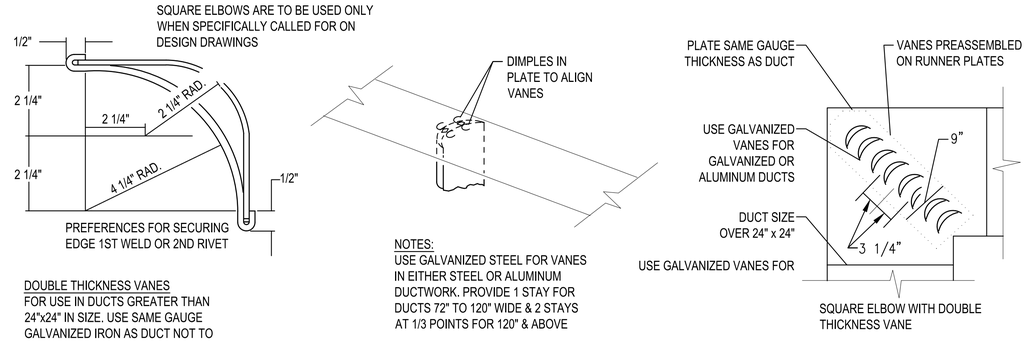

DOUBLE THICKNESS VANES
FOR USE IN DUCTS GREATER THAN 24"x24" IN SIZE. USE SAME GAUGE GALVANIZED IRON AS DUCT NOT TO EXCEED 20 GAUGE

NOTES:
USE GALVANIZED STEEL FOR VANES IN EITHER STEEL OR ALUMINUM DUCTWORK. PROVIDE 1 STAY FOR DUCTS 72" TO 120" WIDE & 2 STAYS AT 1/3 POINTS FOR 120" & ABOVE

1 TURNING VANE DETAIL

NOT TO SCALE

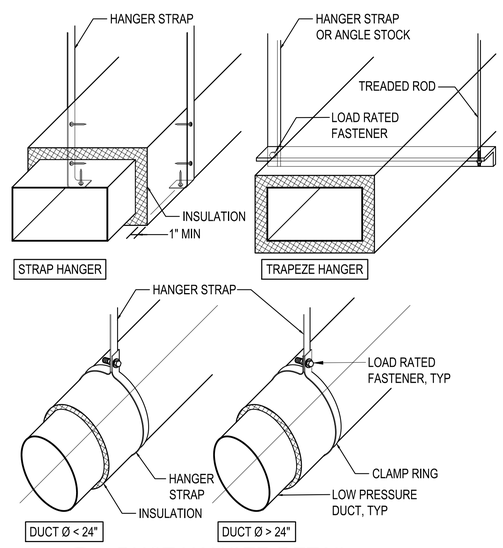

2 DUCT HANGER DETAIL

NOT TO SCALE

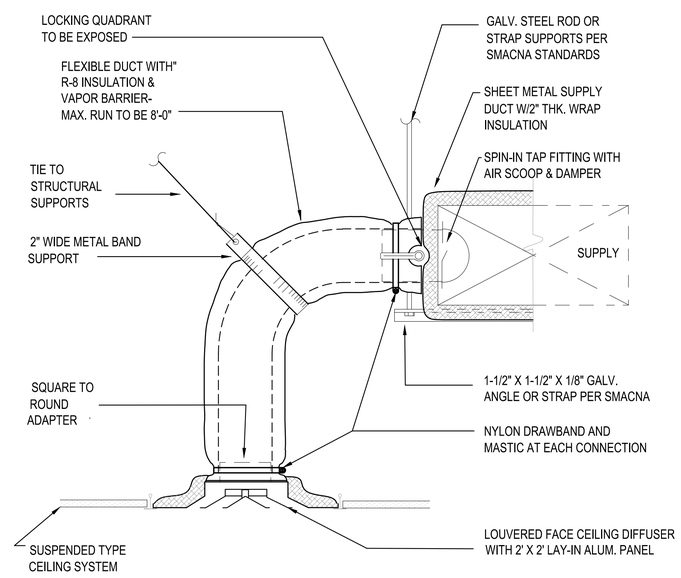

3 TYPICAL DIFFUSER DETAIL

NOT TO SCALE

Consultant

ALABAMA LICENSED No. 24744 PROFESSIONAL ENGINEER ROGER J. SMITH
SEAL
7/8/2026

NO.	DATE	DESCRIPTION

REVISIONS

STRICKLAND YOUTH CENTER COURTROOM RENOVATIONS
2315 COSTARIDES ST
MOBILE, AL 36617

HVAC DETAILS

Project Number: 214010
Date: 07-08-2026
Scale: AS NOTED
Sheet # M-400

ISSUED FOR BID

© Baker 2026

ELECTRICAL SPECIFICATIONS

1. GENERAL ELECTRICAL:
   - 1.1. THE CONTRACTOR SHALL FURNISH ALL LABOR, MATERIALS AND EQUIPMENT NECESSARY FOR THE INSTALLATION OF A COMPLETE ELECTRICAL SYSTEM AS INDICATED WITHIN THESE DRAWINGS. ALL WORK SHALL BE INSTALLED IN STRICT ACCORDANCE WITH ALL APPLICABLE CODES AND ORDINANCES AND WITH MANUFACTURER'S RECOMMENDATIONS.
   - 1.2. THE CONTRACTOR SHALL CAREFULLY EXAMINE THE ARCHITECTURAL, STRUCTURAL, ELECTRICAL AND MECHANICAL DRAWINGS PRIOR TO SUBMITTING HIS BID. THE CONTRACTOR WILL BE REQUIRED TO FURNISH, INSTALL AND CONNECT ALL ITEMS AS INDICATED ON THE DRAWINGS.
   - 1.3. THE ARCHITECT SHALL BE NOTIFIED OF ANY CONFLICTS, OR INTERFERENCES THAT OCCUR BETWEEN INDIVIDUAL DRAWINGS.
   - 1.4. ALL MATERIALS AND EQUIPMENT SHALL BE INSTALLED IN A NEAT, FIRST CLASS, WORKMANLIKE MANNER, TO THE APPROVAL OF THE ARCHITECT/ENGINEER AND GOVERNING AUTHORITIES.
   - 1.5. IN ADDITION TO THE MANUFACTURERS STANDARD GUARANTEES, THE CONTRACTOR SHALL GUARANTEE ALL MATERIALS, EQUIPMENT AND WORKMANSHIP AGAINST DEFECTS FOR ONE YEAR FROM THE DATE OF FINAL ACCEPTANCE, AND SHALL CORRECT ANY DEFECTS AT NO ADDITIONAL COST TO THE OWNER. ALL LAMPS SHALL BE GUARANTEED FOR 30 DAYS AFTER ACCEPTANCE.
   - 1.6. THE LOADS SHOWN FOR APPLIANCES AND EQUIPMENT ARE BASED ON DESIGN INFORMATION. THE CONTRACTOR SHALL VERIFY ALL APPLIANCE LOADS PRIOR TO RUNNING THE CIRCUIT. THE MINIMUM CIRCUIT REQUIREMENTS SHALL BE BASED ON THE APPLIANCE NAMEPLATE VALUE OR CODE REQUIREMENTS, WHICHEVER IS MORE STRINGENT. ADDITIONAL COMPENSATION SHALL NOT BE ALLOWED FOR APPLIANCE MODIFICATIONS BY THE CONTRACTOR.
   - 1.7. PRIOR APPROVAL: PRIOR APPROVAL SHALL BE REQUIRED FOR ANY MANUFACTURER OTHER THAN THOSE LISTED FOR ALL SPECIFIED ITEMS IN THESE DRAWINGS. SUBMIT ALL REQUESTS FOR PRIOR APPROVAL 2 WEEKS PRIOR TO BID OPENING (UNLESS OTHERWISE SPECIFIED). ENGINEER'S APPROVAL WILL BE IN THE FORM OF AN ADDENDUM.

2. CODES & STANDARDS:
   - 2.1. INSTALLATION AND MATERIALS SHALL COMPLY WITH THE LATEST ADOPTED EDITION OF THE FOLLOWING CODES & STANDARDS:
     - 2.1.1. NATIONAL ELECTRICAL CODE.
     - 2.1.2. NFPA 72. NATIONAL FIRE PROTECTION CODE.
     - 2.1.3. INTERNATIONAL BUILDING CODE.
     - 2.1.4. INTERNATIONAL ENERGY CONSERVATION CODE.
     - 2.1.5. NFPA 101.
     - 2.1.6. ADA .
     - 2.1.7. ANSI.
     - 2.1.8. NEMA.
     - 2.1.9. OSHA.
     - 2.1.10. UL.

3. ALTERATIONS & ADDITIONS TO EXISTING WORK:
   - 3.1. PROVIDE ALL NECESSARY ADDITIONS AND ALTERATIONS TO EXISTING WORK AS REQUIRED TO PROVIDE AND MAINTAIN A COMPLETE AND PROPER ELECTRICAL INSTALLATION.
   - 3.2. AS NECESSARY, RELOCATE EXISTING ELECTRICAL WORK SO OTHER TRADES CAN PURSUE THEIR WORK.
   - 3.3. MAINTAIN POWER TO EXISTING PORTIONS OF BUILDINGS FED FROM OR THROUGH AREA IN SCOPE OF THIS CONTRACT.
   - 3.4. COORDINATE ALL REQUIRED OUTAGES WITH OWNER.

4. BASIC MATERIALS & METHODS:
   - 4.1. ALL POWER AND DISTRIBUTION CABLING SHALL BE COPPER TYPE THWN/THHN.
   - 4.2. ALL ELECTRICAL EQUIPMENT, DEVICES, ETC. LOCATED OUTDOORS SHALL BE WEATHERPROOF.
   - 4.3. ELECTRICAL CONTRACTOR SHALL PROVIDE ADEQUATE AND PROPER SUPPORT FOR ALL ELECTRICAL OUTLETS, DEVICES, LIGHT FIXTURES, ETC. BUILT IN OR MOUNTED ON CEILINGS. NO OUTLET BOX, DEVICE, LIGHT FIXTURE, ETC. SHALL BE SUPPORTED FROM ANY ACOUSTICAL CEILING TILE OR DRYWALL CEILINGS. PROVIDE METAL SUPPORTS THAT ARE MADE FOR USE WITH CEILING GRID SYSTEMS OR PROVIDE HANGERS FROM STRUCTURE ABOVE.
   - 4.4. CONDUIT ROUTINGS AND DEVICE/EQUIPMENT LOCATIONS SHOWN ARE DIAGRAMMATIC ONLY, CONTRACTOR SHALL FIELD ROUTE AND LOCATE AS REQUIRED. CONDUIT ROUTINGS SHALL BE PARALLEL OR PERPENDICULAR TO BUILDING LINES.
   - 4.5. JUNCTION BOXES LOCATED ABOVE CEILING SHALL BE INSTALLED FACING DOWN AND SHALL BE ACCESSIBLE AFTER INSTALLATION.
   - 4.6. COORDINATE ALL ELECTRICAL WORK WITH OTHER TRADES AND STRUCTURAL COMPONENTS.
   - 4.7. THE CONDUIT MATERIAL SHALL BE AS FOLLOWS (NM CABLE NOT PERMITTED):
     - 4.7.1. BELOW GRADE - RNC (POWER & SITE LIGHTING ONLY). ELBOWS >1-1/2" SHALL BE RGS.
     - 4.7.2. RISER FROM 36" BELOW GRADE - RGS.
     - 4.7.3. CONCEALED RISER FROM 36" BELOW GRADE - RNC (POWER ONLY).
     - 4.7.4. ABOVE GRADE SUBJECT TO PHYSICAL ABUSE - RGS.
     - 4.7.5. ABOVE GRADE NOT SUBJECT TO PHYSICAL ABUSE OR WEATHER - EMT.
     - 4.7.6. INDOORS NOT SUBJECT TO PHYSICAL ABUSE - EMT. OR METAL CLAD CABLE (AS ALLOWED BY LOCAL AUTHORITY HAVING JURISDICTION).
     - 4.7.7. FINAL CONDUIT CONNECTIONS TO HEAT PUMPS, AIR HANDLERS, EXHAUST FANS, AND WATER HEATERS SHALL BE LFMC WHETHER INTERIOR OR EXTERIOR.
   - 4.8. CONDUIT FITTINGS SHALL BE AS FOLLOWS:
     - 4.8.1. EMT - <=2" USE STEEL SET SCREW WITH INSULATED THROATS FOR INTERIOR/ USE COMPRESSION FITTINGS WITH INSULATED THROATS FOR EXTERIOR, >2" USE SET-SCREW STEEL WITH INSULATED THROATS.
     - 4.8.2. RGS - THREADED GALVANIZED STEEL.
     - 4.8.3. PVC - PVC APPROVED FOR THE USE.
     - 4.8.4. FMC - ZINC-PLATED STEEL OR CADMIUM-PLATED MALLEABLE IRON SCREW TYPE WITH INSULATED THROAT.
     - 4.8.5. LFMC - CADMIUM-PLATED MALLEABLE IRON OR STEEL COMPRESSION TYPE WITH INSULATED THROAT.
   - 4.9. ALL OUTLET BOXES SHALL BE 4"X4"X1-1/2" DEEP MINIMUM.
   - 4.10. ELECTRICAL CONTRACTOR SHALL WORK CLOSELY WITH THE MASONRY CONTRACTOR ON THE INSTALLATION OF ALL ELECTRICAL BOXES, CABINETS, RINGS, ETC. IN MASONRY WALLS. THE BOXES SHALL BE INSTALLED AT THE UNIFORM HEIGHTS CALLED FOR ON THE DRAWINGS AND SPECIFICATIONS. PROVIDE APPROPRIATE DEPTH MASONRY RINGS FOR ALL OUTLETS IN MASONRY WALLS TO INSURE PROPER CUTTING AND FITTING. THE FACE OF THE CABINETS, BOXES, RINGS, ETC. SHALL BE PLUMB AND FLUSH WITH THE FACE OF THE FINISH MATERIAL. ANY CABINET, OUTLET BOX, ETC. NOT MEETING THE ABOVE REQUIREMENT SHALL BE REMOVED AND REINSTALLED AT NO ADDITIONAL COST TO THE OWNER.
   - 4.11. ALL DIMENSIONS TO DEVICES AFF SHALL BE TO CENTERLINE UNLESS NOTED OTHERWISE.
   - 4.12. WALL OUTLETS SHALL NOT BE INSTALLED BACK TO BACK.
   - 4.13. COORDINATE LOCATIONS OF ELECTRICAL EQUIPMENT, DEVICES, OUTLETS, FIXTURES, ETC., WITH ARCHITECTURAL PLANS, ELEVATIONS AND REFLECTED CEILING PLANS PRIOR TO ROUGH-IN WORK.

5. GROUNDING & BONDING:
   - 5.1. PROVIDE AN INSULATED EQUIPMENT GROUNDING CONDUCTOR IN ALL CONDUITS.
   - 5.2. ALL CABLES SHALL BE COPPER, ALL BOLTED CONNECTIONS SHALL BE BRONZE.

6. IDENTIFICATION:
   - 6.1. PROVIDE ENGRAVED 2"x4" PHENOLIC LABELS FOR ALL PANELBOARDS, SAFETY SWITCHES, TRANSFORMERS, CABINETS, ETC.
   - 6.2. PAINT THE RACEWAY SYSTEM COUPLINGS AND BOX COVERS ABOVE CEILINGS FOR THE FOLLOWING SYSTEMS AS FOLLOWS:
     - 6.2.1. FIRE ALARM - RED.
     - 6.2.2. 208 VOLT SYSTEMS - BLACK.
     - 6.2.3. 480 VOLT SYSTEMS - BROWN.
     - 6.2.4. AFTER PAINTING, WRITE THE CIRCUIT NUMBER (I.E. "LPA-34") ON ALL BRANCH CIRCUIT JUNCTION BOX COVERS ABOVE CEILING WITH WHITE MARKER.

7. GENERAL WIRING DEVICES:
   - 7.1. SWITCHES - SPECIFICATION GRADE, 20 AMP, COLOR BY ARCHITECT.
   - 7.2. RECEPTACLES - SPECIFICATION GRADE, 20 AMP, NEMA 5-20R, COLOR BY ARCHITECT.
   - 7.3. COVER PLATES - NYLON, COLOR BY ARCHITECT.
   - 7.4. SPECIAL RECEPTACLES - PER THE DRAWINGS, VERIFY WITH EQUIPMENT BEING SUPPLIED.
   - 7.5. APPROVED MANUFACTURERS - HUBBELL, LEVITON, EAGLE, PASS & SEYMOUR.

8. SAFETY SWITCHES:
   - 8.1. HEAVY DUTY, VISIBLE BLADE, LOCKABLE, QUICK-MAKE/QUICK-BREAK, HORSEPOWER RATED, FUSED WHERE INDICATED.
   - 8.2. PROVIDE WITH GROUND LUG KIT.
   - 8.3. INTERIOR - NEMA 1.
   - 8.4. EXTERIOR - NEMA 3R.
   - 8.5. APPROVED MANUFACTURERS - SQUARE D, GENERAL ELECTRIC, CUTLER-HAMMER SIEMENS, EATON.

9. MOTOR STARTERS:
   - 9.1. MANUAL TYPE SHALL BE TOGGLE WITH THERMAL OVERLOAD.
   - 9.2. MAGNETIC TYPE SHALL HAVE SOLID STATE OVERLOAD RELAY WITH Ø LOSS AND Ø UNBALANCE PROTECTION, HOA SWITCH, RED RUN AND GREEN STOP LED LIGHTS.
   - 9.3. INTERIOR - NEMA 1.
   - 9.4. EXTERIOR - NEMA 3R.
   - 9.5. APPROVED MANUFACTURERS - SQUARE D, GENERAL ELECTRIC, CUTLER-HAMMER, SIEMENS, EATON.

10. PANELBOARDS:
   - 10.1. INTERIOR - NEMA 1.
   - 10.2. EXTERIOR - NEMA 3R.
   - 10.3. PROVIDE UPDATED TYPE-WRITTEN DIRECTORY IN CLEAR SLEEVE ON INSIDE OF DOOR.

APPROVED MANUFACTURERS - COMPATIBLE WITH EXISTING ITE EQUIPMENT.

11. LIGHTING:
   - 11.1. PROVIDE A 6'-0" MAXIMUM FLEXIBLE CONNECTION FROM EACH RECESSED LIGHTING FIXTURE TO JUNCTION BOX ABOVE CEILING.
   - 11.2. FOR FIXTURES IN LAY-IN CEILINGS, PROVIDE WIRE SUPPORTS AT ALL FOUR CORNERS OF FIXTURE SEPARATE FROM LAY-IN CEILING WIRE SUPPORTS.

12. FIRE ALARM SYSTEM:
   - 12.1. DO NOT LOAD ANY SLC CONTROLLER MORE THAN 75% OF ITS ALLOWABLE DEVICE LIMIT.
   - 12.2. DO NOT LOAD ANY NAC CONTROLLER MORE THAN 75% OF ITS ALLOWABLE CAPACITY.
   - 12.3. ALL INITIATING DEVICES SHALL BE INTELLIGENT ADDRESSABLE DEVICES. PULL STATIONS SHALL BE SINGLE ACTION TYPE, SMOKE DETECTORS SHALL BE PHOTOELECTRIC TYPE, DUCT SMOKE DETECTORS SHALL BE SAMPLE TUBE TYPE. PROVIDE REMOTE INDICATORS FOR ALL DUCT SMOKE DETECTORS NOT IN PLAIN SIGHT FROM FLOOR LEVEL.
   - 12.4. PULL STATIONS SHALL BE MOUNTED 48" AFF TO CENTER, STROBES SHALL BE MOUNTED 80" AFF TO BOTTOM OF STROBE LENS.
   - 12.5. TAG ALL CIRCUITS IN CABINETS AND JUNCTION LOCATIONS.
   - 12.6. SLC CABLES SHALL BE #18AWG TWISTED PAIR MINIMUM.
   - 12.7. NAC CABLES SHALL BE #14AWG MINIMUM.
   - 12.8. ALL CABLES SHALL BE IN CONDUIT DEDICATED TO THE FIRE ALARM SYSTEM. MINIMUM SIZE IS 3/4".
   - 12.9. ALL TERMINATIONS SHALL BE UNDER SCREW TERMINALS. WIRE NUTS SHALL NOT BE USED.
   - 12.10. TEST, CERTIFY & DOCUMENT IN COMPLIANCE WITH NFPA 72.
   - 12.11. APPROVED MANUFACTURERS - SIMPLEX.

COM*check* Software Version COMcheckWeb

Interior Lighting Compliance Certificate

Project Information

Energy Code: 2015 IECC
Project Title: SYC Courtroom Renovation
Project Type: Alteration

Construction Site:

Owner/Agent:
Strickland Youth Center
2315 Costarides Street
Mobile, Alabama 36617

Designer/Contractor:
Christina Marie
Jaguar Consulting
8658 Capital Dr. N
Mobile, Alabama 36695
2514559189
christinamarieelt@gmail.com

Allowed Interior Lighting Power

A Area Category	B Floor Area (ft2)	C Allowed Watts / ft2	D Allowed Watts
1-Court House	805	1.01	813
		Total Allowed Watts =	813

Proposed Interior Lighting Power

A Fixture ID : Description / Lamp / Wattage Per Lamp / Ballast	B Lamps/ Fixture	C # of Fixture	D Fixture Watt.	E (C X D)
Court House (805 sq.ft.)				
LED: 2FP: Other:	1	14	30	420
			Total Proposed Watts =	420

Interior Lighting PASSES

Interior Lighting Compliance Statement

Compliance Statement: The proposed interior lighting alteration project represented in this document is consistent with the building plans, specifications, and other calculations submitted with this permit application. The proposed interior lighting systems have been designed to meet the 2015 IECC requirements in COM*check* Version COMcheckWeb and to comply with any applicable mandatory requirements listed in the Inspection Checklist.

Christina Marie - Professional Engineer — Name - Title
Signature
07/01/2026 — Date

ALABAMA LICENSED No. 50660 PROFESSIONAL ENGINEER CHRISTINA MARIE
07/01/26

Project Title: SYC Courtroom Renovation
Data filename:
Report date: 05/05/26
Page 1

BAKER LPA GROUP, LLP
Michael Baker INTERNATIONAL
11 NORTH WATER STREET
SUITE 14290 MOBILE, AL 36602

JAGUAR CONSULTING
CHRISTINA MARIE P.E.
PE 50660 - ECA 50377
C: (251) 455-9189
JaguarEngineers@Yahoo.Com

Consultant

ALABAMA LICENSED No. 50660 PROFESSIONAL ENGINEER CHRISTINA MARIE
07/08/26
SEAL

NO.	DATE	DESCRIPTION

REVISIONS

STRICKLAND YOUTH CENTER COURTROOM RENOVATIONS
2315 COSTARIDES ST
MOBILE, AL 36617

ELECTRICAL - SPECIFICATIONS

Project Number: 214010
Date: 07-08-26
Scale: AS NOTED
Sheet # E-101

ISSUED FOR BID

© Baker 2026

ABBREVIATIONS

A	AMPS
AC	ABOVE COUNTER
AFF	ABOVE FINISHED FLOOR
AFG	ABOVE FINISHED GRADE
AHU	AIR HANDLING UNIT
AL	ALUMINUM
ARCH	ARCHITECT OR ARCHITECTURAL
ATS	AUTOMATIC TRANSFER SWITCH
AWG	AMERICAN WIRE GAUGE
BAS	BUILDING AUTOMATION SYSTEM
BFG	BELOW FINISHED GRADE
BKR	CIRCUIT BREAKER
BLDG	BUILDING
C	CONDUIT
C/B	CIRCUIT BREAKER
CKT	CIRCUIT
CT	CURRENT TRANSFORMER
CU	COPPER
DDC	DIRECT DIGITAL CONTROL
DEMO	DEMOLISH
ELEC	ELECTRICAL
EMGB	ELECTRICAL MAIN GROUNDING BUSBAR
EWC	ELECTRIC WATER COOLER
EMT	ELECTRICAL METALLIC TUBING
EQUIP	EQUIPMENT
FMC	FLEXIBLE METAL CONDUIT
FA	FIRE ALARM
FACP	FIRE ALARM SYSTEM CONTROL PANEL
FLA	FULL LOAD AMPS
GFCI	ROUND FAULT CIRCUIT INTERRUPTER
GND	GROUND
GEC	GROUNDING ELECTRODE CONDUCTOR
HH	HANDHOLE
HOA	HAND-OFF-AUTOMATIC
HP	HEAT PUMP OR HORSEPOWER
HVAC	HEATING, VENTILATION & AIR-CONDITIONING
JB	JUNCTION BOX
kAIC	KILO-AMPERE INTERRUPTING CAPABILITY
kCMIL	THOUSAND CIRCULAR MILS
LTG	LIGHTING
LFMC	LIQUID TIGHT FLEXIBLE METAL CONDUIT
LV	LOW VOLTAGE
MAX	MAXIMUM
MCA	MINIMUM CIRCUIT AMPACITY
MCC	MOTOR CONTROL CENTER
MCM	THOUSAND CIRCULAR MILS
MH	MANHOLE
MISC	MISCELLANEOUS
MLO	MAIN LUGS ONLY
MNT	MOUNTING HEIGHT
MTG	MOUNTING
MTS	MANUAL TRANSFER SWITCH
MV	MEDIUM VOLTAGE
N1	NEMA 1
N3R	NEMA 3R
N/A	NOT APPLICABLE
NEC	NATIONAL ELECTRICAL CODE
NEU	NEUTRAL
OCPD	OVERCURRENT PROTECTION DEVICE
OHE	OVERHEAD ELECTRIC
PNL	PANELBOARD
PWR	POWER
REC	RECEPTACLE
REQ	REQUIRED
RM	ROOM
RGS	RIGID GALVANIZED STEEL CONDUIT
RNC	RIGID NON-METALLIC CONDUIT
SA	SURGE ARRESTER
SCA	SHORT CIRCUIT AMPS
SPEC	SPECIFICATION
SWBD	SWITCHBOARD
SWGR	SWITCHGEAR
TVSS	TRANSIENT VOLTAGE SURGE SUPPRESSION
TYP	TYPICAL
UG	UNDERGROUND
UL	UNDERWRITERS' LABORATORIES
UPS	UNINTERRUPTIBLE POWER SUPPLY
V	VOLT
VA	VOLT-AMPERES
VAR	VOLT-AMPERES REACTIVE
VAV	VARIABLE AIR VOLUME UNIT
W	WATTS
WAO	WORK AREA OUTLET
WP	WEATHERPROOF
XFMR	TRANSFORMER
ϕ	PHASE
72°	DEGREES
Δ	DELTA
Ω	OHMS

ELECTRICAL LEGEND

POWER DEVICES:

SCRIPTS:

G - GROUND FAULT CIRCUIT INTERRUPTER TYPE.
WP - GFI DEVICE WITH DIECAST WEATHERPROOF BACKBOX & DIECAST WEATHERPROOF (IN-USE) COVERPLATE. IN EXTERIOR LOCATIONS MOUNT 30" AFG. WEATHERPROOF OUTLET BOX HOODS ARE TO BE LISTED AND IDENTIFIED AS "EXTRA-DUTY".
EWC - CONCEAL RECEPTACLE BEHIND EWC (COORDINATE WITH DIVISION 15).
REF - COORDINATE RECEPTACLE LOCATION / MOUNTING HEIGHT WITH REFRIGERATOR.
TV - COORDINATE RECEPTACLE LOCATION WITH A/V OUTLET, TV AND OWNER / ARCHITECT PRIOR TO ROUGH IN.
84" - MOUNTING HEIGHT OF DEVICE AFF.
21 - # INDICATES PANELBOARD CKT NUMBER

NEMA 5-20R GENERAL DUPLEX RECEPTACLE. (MOUNT OUTLET 18" AFF)

NEMA 5-20R DUPLEX GENERAL RECEPTACLE. (MOUNT IN MILLWORK AS DIRECTED)

WIRING:

CIRCUIT WIRING (2#12, 1#12G, 3/4"C., UNLESS OTHERWISE NOTED). (TICK MARKS DESIGNATE QUANTITY OF HOT/NEU CONDUCTORS)

2DP-XX CIRCUIT HOME RUN TO THE INDICATED PANELBOARD. (2#12, 1#12G, 3/4" C., UNLESS OTHERWISE NOTED)

- MINIMUM SIZE ON 120V HOMERUNS GREATER THAN 50 FEET SHALL BE #10 AWG.
- MINIMUM SIZE ON 120V HOMERUNS GREATER THAN 100 FEET SHALL BE #8 AWG.
- MINIMUM SIZE ON 120V HOMERUNS GREATER THAN 160 FEET SHALL BE #6 AWG.
- MINIMUM SIZE ON 277V HOMERUNS GREATER THAN 100 FEET SHALL BE #10 AWG.

INCREASE CONDUIT SIZE AS REQUIRED PER NEC. TEXT INDICATES CIRCUIT DESIGNATION.

LV LOW VOLTAGE CABLING NOT ROUTED IN CONDUIT. (SEE MANUFACTURER'S SPECIFICATIONS FOR WIRE TYPE)

LIGHTING DEVICES:

$ SINGLE POLE LIGHTING SWITCH. MOUNT 48" TO TOP OF BOX AFF. SUBSCRIPT INDICATES AS FOLLOWS:
D - LOW VOLTAGE DIMMER SWITCH:
- SEE MANUFACTURER'S SPECS FOR WIRING REQUIREMENTS, AND PROGRAMMED TO BE MANUAL ON.

OS LOW VOLTAGE 360° DUAL TECHNOLOGY OCCUPANCY SENSOR. (MOUNT IN CEILING, UNLESS OTHERWISE NOTED)

PR POWER RELAY PACK WITH DIMMING. (MOUNT ABOVE CEILING, UNLESS OTHERWISE NOTED)

POWER EQUIPMENT:

POWER PANELBOARD. (SEE SCHEDULES FOR MORE INFORMATION)

DISCONNECT SWITCH (NON-FUSED) (HEAVY DUTY FOR OUTDOOR USE)

IDENTIFICATION:

HPU 1 IDENTIFICATION TAG: MECHANICAL EQUIPMENT. (SEE SCHEDULES FOR MORE INFORMATION)

BLT IDENTIFICATION TAG: LIGHTING FIXTURES. (SEE SCHEDULES FOR MORE INFORMATION)

2DP IDENTIFICATION TAG: PANELBOARDS. (SEE SCHEDULES FOR MORE INFORMATION)

MISCELLANEOUS EQUIPMENT:

X ELECTRICAL TERMINATION TO EQUIPMENT. (SEE SCHEDULES FOR MORE INFORMATION)

$M 30 AMP TWO POLE MOTOR RATED SWITCH. MOUNTED AT THE EQUIPMENT. PROVIDE PHENOLIC LABEL.

FIRE ALARM LEGEND

SIGNALING LINE CIRCUIT (SLC) DEVICES:

SD FIRE ALARM SMOKE DETECTOR: PHOTOELECTRIC TYPE AND ADDRESSABLE. (MOUNT TO CEILING, UNLESS OTHERWISE NOTED)

NOTIFICATION APPLIANCE CIRCUIT (NAC) DEVICES:

FIRE ALARM AUDIO (SPEAKER)/VISUAL NOTIFICATION DEVICE. (MOUNT IN CEILING)

COMMUNICATION LEGEND

TELECOMMUNICATIONS SYSTEM:

▶ COMMUNICATIONS OUTLET. PROVIDE A DEEP 4" SQUARE BOX WITH 3/4" CONDUIT AND BUSHINGS ON BOTH ENDS TO ACCESSIBLE AREA ABOVE THE CEILING. PROVIDE TWO CATEGORY 6 CABLES (VERIFY CABLE TYPE WITH OWNER) FROM THE DEVICE LOCATION TO THE COMMUNICATIONS BACKBOARD. MOUNT AT 18" A.F.F. UNLESS SUBSCRIPTED OTHERWISE. "AC" DESIGNATES ABOVE COUNTER MOUNTING. THE ELECTRICAL CONTRACTOR IS TO INSTALL, TERMINATE, TEST AND LABEL ALL CABLING. DEVICE PLATES ARE TO BE SELECTED BY THE ARCHITECT.

MICROPHONE OUTLET. PROVIDE A DEEP 4" SQUARE BOX WITH 3/4" CONDUIT FROM DEVICE LOCATION BACK TO TELECOM / FILE ROOM. PROVIDE AND INSTALL CABLING (VERIFY CABLE AND DEVICE PLATE CONNECTOR TYPE WITH OWNER'S I.T. REPRESENTATIVE) FROM THE DEVICE LOCATION TO THE OWNER PROVIDED AUDIO INTERFACE. FINAL MOUNTING HEIGHT SHALL BE FIELD COORDINATED WITH THE DECORATIVE WALL AND THE FINAL FURNITURE SELECTION. "AC" DESIGNATES ABOVE COUNTER MOUNTING. THE ELECTRICAL CONTRACTOR IS TO INSTALL, TERMINATE, TEST AND LABEL ALL CABLING. DEVICE PLATE FINISHES ARE TO BE SELECTED BY ARCHITECT AND PROVIDED AND INSTALLED BY CONTRACTOR.

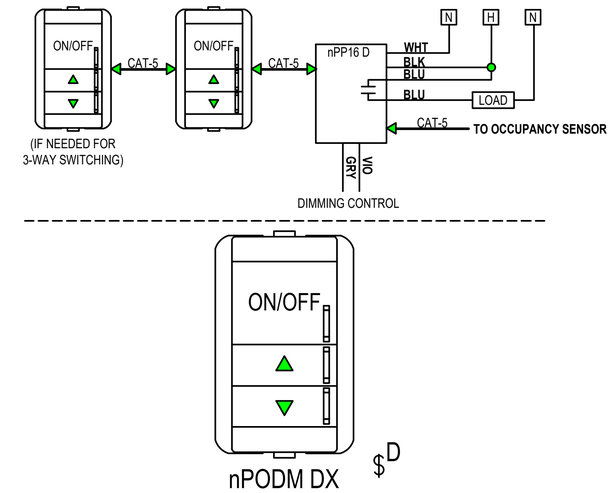

1 LOW VOLTAGE SWITCH WITH DIMMING DETAIL AND WIRING DIAGRAM

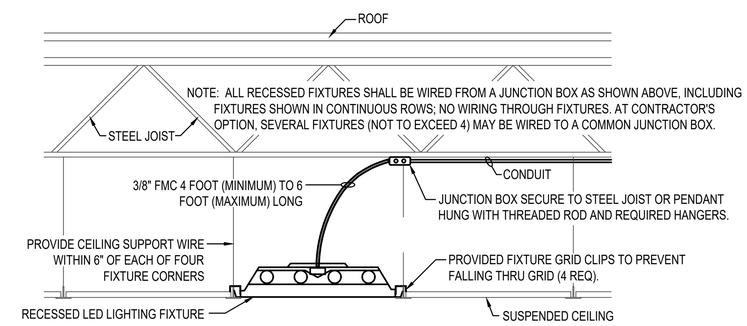

2 TYPICAL FIXTURE INSTALLATION DETAIL
NOT TO SCALE

BAKER LPA GROUP, LLP
Michael Baker INTERNATIONAL
11 NORTH WATER STREET
SUITE 14290 MOBILE, AL 36602

JAGUAR CONSULTING
CHRISTINA MARIE P.E.
PE 50660 - ECA 50377
C: (251) 455-9189
JaguarEngineers@Yahoo.Com

Consultant

ALABAMA LICENSED No. 50660 PROFESSIONAL ENGINEER CHRISTINA MARIE

SEAL

07/08/26

NO.	DATE	DESCRIPTION

REVISIONS

STRICKLAND YOUTH CENTER COURTROOM RENOVATIONS
2315 COSTARIDES ST
MOBILE, AL 36617

ELECTRICAL - LEGEND AND DETAILS

Project Number: 214010
Date: 07-08-26
Scale: AS NOTED
Sheet # E-102

ISSUED FOR BID

© Baker 2026

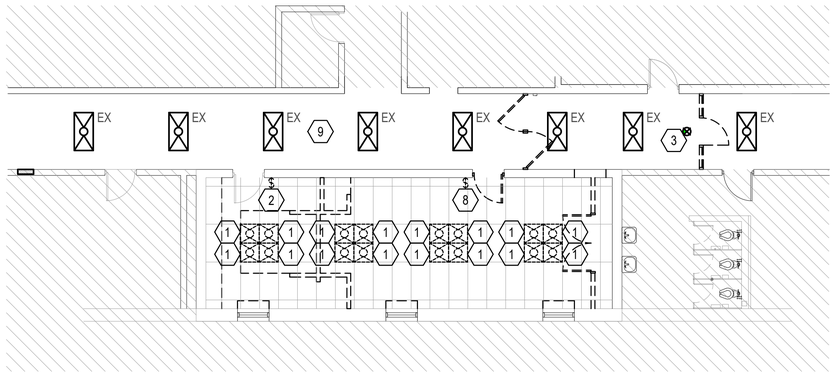

N

1 EXISTING LIGHTING PLAN

8' 0' 8' 16'

SCALE: 1/8"=1'-0"

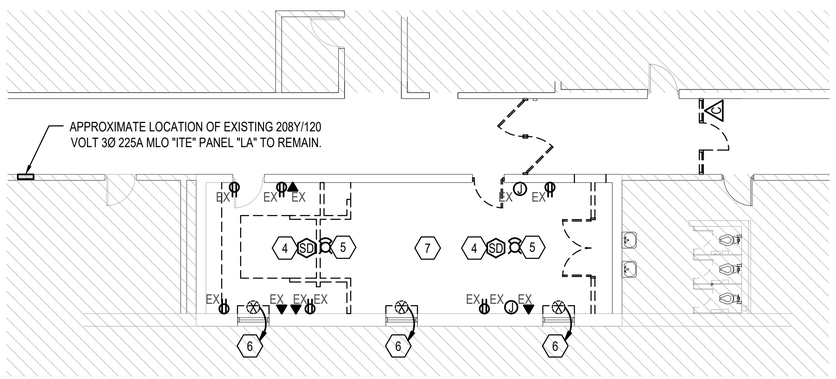

N

2 EXISTING POWER PLAN

8' 0' 8' 16'

SCALE: 1/8"=1'-0"

SHEET KEYNOTE(S)

1. EXISTING LIGHTING FIXTURES TO BE REMOVED AND REPLACED NEW PER NEW WORK PLANS.
2. EXISTING LIGHTING CONTROL DEVICE TO BE REMOVED AND REPLACED NEW PER NEW WORK PLANS.
3. EXISTING EXIT EGRESS FIXTURE TO BE RELOCATED PER NEW WORK PLANS.
4. EXISTING CEILING MOUNTED FIRE ALARM SMOKE DETECTOR TO BE REMOVED AND SECURED DURING THE DEMOLITION PHASE. PROTECT AND SECURE FIRE ALARM CABLING ABOVE CEILING AND RECONNECT DURING THE NEW WORK PHASE.
5. EXISTING CEILING MOUNTED FIRE ALARM NOTIFICATION DEVICE TO BE REMOVED AND SECURED DURING THE DEMOLITION PHASE. PROTECT AND SECURE FIRE ALARM CABLING ABOVE CEILING AND RECONNECT DURING THE NEW WORK PHASE.
6. EXISTING FN COIL UNIT (FCU) TO BE REMOVED BY MECHANICAL CONTRACTOR. THE ELECTRICAL CONTRACTOR SHALL DISCONNECT AND REMOVE THE EXISTING CIRCUIT SERVING THE FCU. MARK EXISTING BREAKER AS "SPARE".
7. UNLESS OTHERWISE NOTED, ALL EXISTING WIRING DEVICES (POWER AN DATA) ARE EXISTING TO REMAIN.
8. EXISTING LIGHTING CONTROL DEVICE TO BE COMPLETELY REMOVED. REMOVE CONDUIT AND CONDUCTORS BACK TO NEAREST JUNCTION BOX TO REMAIN.
9. EXISTING LIGHTING IN CORRIDOR TO REMAIN.

GENERAL NOTE(S)

1. "EX" INDICATES DEVICE THAT IS EXISTING TO REMAIN.
2. THE ELECTRICAL CONTRACTOR SHALL VISIT THE SITE AND FAMILIARIZE THEMSELVES WITH THE WHOLE SCOPE OF WORK PRIOR TO SUBMITTING THEIR BID.
3. FACILITY WAS OCCUPIED AND IN USE AT TIME OF SITE INVESTIGATION. LOCATION AND QUANTITY OF DEVICES IS BASED ON LIMITED SITE ACCESSIBILITY. THE ELECTRICAL CONTRACTOR SHALL FIELD VERIFY SITE CONDITIONS PRIOR TO BEGINNING WORK.
4. ENSURE ALL ABANDONED / UNUSED CONDUIT / WIRE / CABLING IS COMPLETELY REMOVED. MARK UNUSED BREAKERS AS "SPARE".
5. EXISTING WALL FINISHES TO BE REMOVED AND INSTALLED NEW. THE ELECTRICAL CONTRACTOR TO REMOVE EXISTING DEVICES AND SECURE DURING THE DEMOLITION PHASE. THE FINAL MOUNTING HEIGHT SHALL BE FIELD COORDINATED WITH ARCHITECT AND ENGINEER PRIOR TO ROUGH IN TO ACCOMMODATE THE NEW WALL FINISH AND OWNER PROVIDED FURNITURE.
6. THE FACILITY WILL BE OCCUPIED DURING THE RENOVATION, THE ELECTRICAL CONTRACTOR SHALL COORDINATE ANY AND ALL OUTAGES WITH THE OWNER IN ADVANCE AND SCHEDULE A TIME THAT ACCOMMODATES BOTH THE PROJECT AND THE OWNER.

BAKER LPA GROUP, LLP

Michael Baker INTERNATIONAL

11 NORTH WATER STREET
SUITE 14290 MOBILE, AL 36602

JAGUAR CONSULTING

CHRISTINA MARIE P.E.
PE 50660 - ECA 50377
C: (251) 455-9189
JaguarEngineers@Yahoo.Com

Consultant

ALABAMA LICENSED No. 50660 PROFESSIONAL ENGINEER CHRISTINA MARIE

07/08/26

SEAL

NO.	DATE	DESCRIPTION

REVISIONS

STRICKLAND YOUTH CENTER COURTROOM RENOVATIONS

2315 COSTARIDES ST
MOBILE, AL 36617

ELECTRICAL - EXISTING PLAN

Project Number: **214010**

Date: **07-08-26**

Scale: **AS NOTED**

Sheet # E-201

ISSUED FOR BID

© Baker 2026

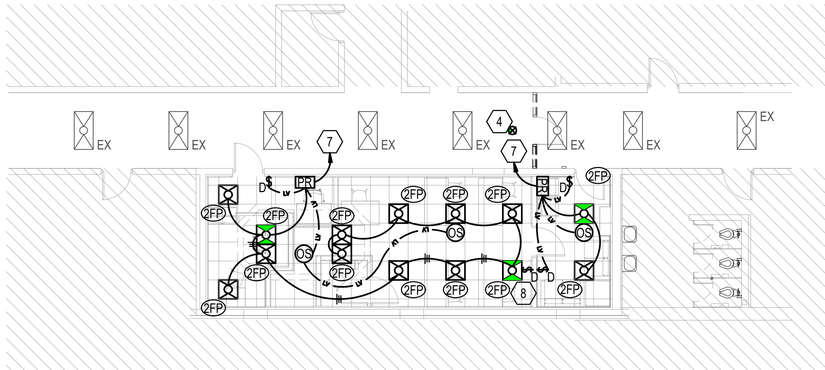

N

1 MODIFIED LIGHTING PLAN

8' 0' 8' 16'

SCALE: 1/8"=1'-0"

APPROXIMATE LOCATION OF EXISTING TELECOM / FILE ROOM. THE ELECTRICAL CONTRACTOR SHALL ROUTE ALL MICROPHONE CONDUITS / CABLING ABOVE CEILING TO THIS SPACE. COORDINATE FINAL LOCATION OF OWNER PROVIDED EQUIPMENT AND ROUTING OF CONDUIT / CABLING PRIOR TO ROUGH IN AND ACCOMMODATE AS REQUIRED.

APPROXIMATE LOCATION OF EXISTING 208Y/120 VOLT 3Ø 225A MLO "ITE" PANEL "LA" TO REMAIN. THE CONTRACTOR SHALL MONITOR THE EXISTING PANEL "LA" IN ACCORDANCE WITH NEC ARTICLE 220.87 TO DETERMINE THE MAXIMUM DEMAND TO AVOID OVERLOADING THE PANEL. THE CONTRACTOR SHALL MEASURE AND RECORD THE DATA AND SUBMIT TO OWNER AND ENGINEER FOR REVIEW PRIOR TO BEGINNING WORK.

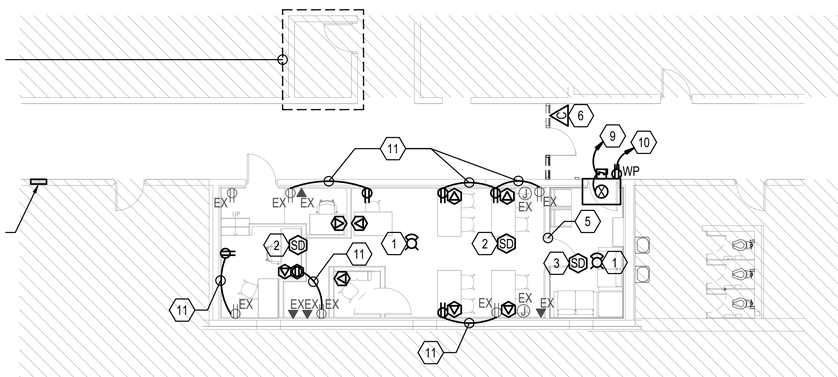

N

2 MODIFIED POWER PLAN

8' 0' 8' 16'

SCALE: 1/8"=1'-0"

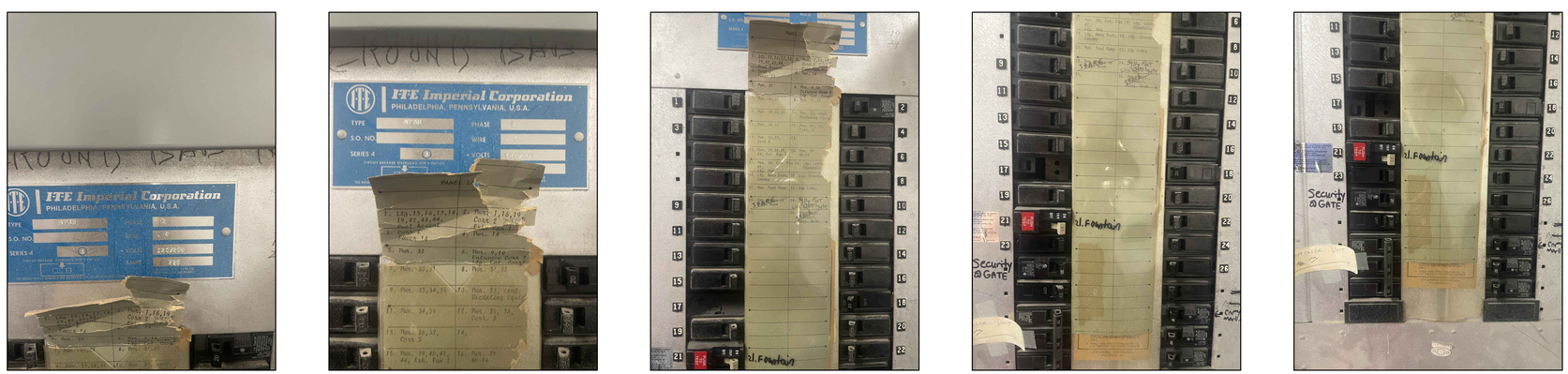

3 EXISTING PANEL "LA"

NOT TO SCALE

SHEET KEYNOTE(S)

1. NEW LOCATION FOR EXISTING FIRE ALARM NOTIFICATION DEVICE. PROVIDE NEW FIRE ALARM CABLING AS REQUIRED BY THE MANUFACTURER TO ACCOMMODATE THE NEW LOCATION.
2. NEW LOCATION FOR EXISTING FIRE ALARM SMOKE DETECTOR. PROVIDE NEW FIRE ALARM CABLING AS REQUIRED BY THE MANUFACTURER TO ACCOMMODATE THE NEW LOCATION.
3. THE CONTRACTOR SHALL PROVIDE AND INSTALL A NEW SMOKE DETECTOR IN THE WAITING ROOM. NEW DEVICE TO BE COMPLETELY COMPATIBLE WITH EXISTING SIMPLEX FIRE ALARM SYSTEM.
4. NEW LOCATION OF EXISTING EXIT EGRESS FIXTURE. THE CONTRACTOR SHALL PROVIDE AND INSTALL NEW 2#12, #12G IN 3/4" CONDUIT AS REQUIRED TO ACCOMMODATE THE NEW LOCATION.
5. LOCATION OF WHERE NEW WALL DIVIDES COURT ROOM AND NEW WAITING / CONSULTING SPACE. THE CONTRACTOR SHALL COORDINATE THE FINAL LOCATION OF THIS WALL WITH THE GENERAL CONTRACTOR AND REMOVE ANY WIRING DEVICE THAT ARE IN CONFLICT WITH THE NEW WALL. FOR ANY DEVICE REMOVED, REMOVE EXISTING ASSOCIATED CIRCUIT BACK TO NEAREST JUNCTION BOX TO REMAIN.
6. NEW LOCATION OF EXISTING DOOR ACCESS CONTROL CARD READER. THE CONTRACTOR SHALL COORDINATE ALL ASPECTS OF THE RELOCATION OF THIS DEVICE WITH THE DOOR INSTALLER AND THE OWNERS ACCESS CONTROL VENDOR. THE DOOR IS ACTIVATED THROUGH A CARD READER AND DOOR STRIKE. ALL COMPONENTS TO BE DISCONNECTED AND REINSTALLED / CONNECTED AT NEW SECURITY DOOR LOCATION AS REQUIRED.
7. CONNECT NEW FIXTURE TO EXISTING LIGHTING CIRCUIT MADE AVAILABLE DURING THE DEMOLITION PHASE. THE CONTRACTOR SHALL PROVIDE AND INSTALL NEW 2#12, #12G IN 3/4" CONDUIT AS REQUIRED FOR THE CONNECTION.
8. CONNECT THIS LOW VOLTAGE DIMMER TO THE DIMMING POWER PACK SERVING THIS SPACE.
9. THE CONTRACTOR SHALL PROVIDE AND INSTALL A NEW 60A/2 POLE BREAKER IN EXISTING PANEL "LA" TO SERVE THE NEW RTU-1. NEW 60A/2 POLE BREAKER TO BE COMPATIBLE WITH EXISTING "ITE" PANEL. THE CONTRACTOR SHALL PROVIDE AND INSTALL 2#6, #10G IN 1" CONDUIT TO SERVE THE NEW RTU-1.
10. THE CONTRACTOR SHALL PROVIDE AND INSTALL A NEW 20A/1 POLE BREAKER IN EXISTING PANEL "LA" TO SERVE THE NEW SERVICE RECEPTACLE. NEW 20A/1 POLE BREAKER TO BE COMPATIBLE WITH EXISTING "ITE" PANEL. THE CONTRACTOR SHALL PROVIDE AND INSTALL 2#12, #12G IN 3/4" CONDUIT TO SERVE THE NEW SERVICE RECEPTACLE.
11. THE CONTRACTOR SHALL PROVIDE AND INSTALL 2#12, #12G IN 3/4" CONDUIT TO EXTEND THE EXISTING RECEPTACLE CIRCUIT TO SERVE THE NEW RECEPTACLES. EXTENDED FEEDER TO BE CONCEALED IN WALLS AND MILLWORK TO AVOID EXPOSED CONDUIT.

GENERAL NOTE(S)

1. "EX" INDICATES DEVICE THAT IS EXISTING TO REMAIN.
2. MODIFIED FIRE ALARM SYSTEM IS TO BE RETESTED AND RE-CERTIFIED AS REQUIRED BY NFPA 72.
3. ALL NEW CONDUIT (POWER / TELECOM / A/V) IS TO BE CONCEALED ABOVE CEILING, IN MILLWORK AND IN WALLS.
4. COORDINATE FINAL LOCATION OF ALL CEILING MOUNTED DEVICES (LIGHT FIXTURES, SENSORS, FIRE ALARM, ETC.) WITH OTHER TRADES PRIOR TO ROUGH IN TO AVOID CONFLICT.

SPECIAL NOTE(S)

1. EXISTING WALL FINISHES TO BE REMOVED AND INSTALLED NEW. THE FINAL MOUNTING HEIGHT OF NEW WIRING DEVICES SHALL BE FIELD COORDINATED WITH ARCHITECT AND ENGINEER PRIOR TO ROUGH IN TO ACCOMMODATE THE NEW WALL FINISH AND OWNER PROVIDED FURNITURE.

BAKER LPA GROUP, LLP
Michael Baker INTERNATIONAL
11 NORTH WATER STREET
SUITE 14290 MOBILE, AL 36602

JAGUAR CONSULTING
CHRISTINA MARIE P.E.
PE 50660 - ECA 50377
C: (251) 455-9189
JaguarEngineers@Yahoo.Com
Consultant

ALABAMA LICENSED No. 50660 PROFESSIONAL ENGINEER CHRISTINA MARIE
SEAL
07/08/26

NO.	DATE	DESCRIPTION

REVISIONS

STRICKLAND YOUTH CENTER COURTROOM RENOVATIONS

2315 COSTARIDES ST
MOBILE, AL 36617

ELECTRICAL - NEW WORK PLAN

Project Number: 214010
Date: 07-08-26
Scale: AS NOTED
Sheet # E-202

ISSUED FOR BID

© Baker 2026